Seniors F Ne-Waza -52kg

Compétiteurs/Competitors

#	Nom/Name	Grade	Club	1	G/W	Pts	Pos
1	Shannon GLOVER	Green	ON	XX	0	0	1

Matchs/Matches

Match	Blanc/White	Bleu/Blue	Rés/Res	Tmp/Tim	Code

Résultats/Results

Pos	Nom/Name

Seniors F Ne-Waza +70kg

Compétiteurs/Competitors

#	Nom/Name	Grade	Club	1	2	3	G/W	Pts	Pos
1	Annaliese HEISSLER	Green	ON	XX	20	20	2	40	1
2	Robyn ELLIOTT	Shodan	ON		XX		0	0	3
3	Vicky PITRE	Blue	NB		20	XX	1	20	2

Matchs/Matches

Match	Blanc/White			Bleu/Blue	Rés/Res	Tmp/Tim	Code
C-5	**Annaliese HEISSLER**	1	2	Robyn ELLIOTT	20 - 0	0:44	IPO
C-10	**Annaliese HEISSLER**	1	3	Vicky PITRE	20 - 0	1:38	IPO
C-15	Robyn ELLIOTT	2	3	**Vicky PITRE**	2 - 20	1:41	IPO

Résultats/Results

Pos	Nom/Name
1	Annaliese HEISSLER, ON
2	Vicky PITRE, NB

Seniors M Ne-Waza -100kg

Compétiteurs/Competitors

#	Nom/Name	Grade	Club	1	2	1	2	1	2	G/W	Pts	Pos
1	Robert HOLTBY	Brown	AB	XX		XX	10	XX	4	2	14	1
2	Elie Georges DAVID-GNAHOUI	Shodan	ON	6	XX		XX		XX	1	6	2

Matchs/Matches

Match	Blanc/White			Bleu/Blue	Rés/Res	Tmp/Tim	Code
C-4	Robert HOLTBY	1	2	**Elie Georges DAVID-GNAHOUI**	4 - 6	4:00	
C-9	Elie Georges DAVID-GNAHOUI	2	1	**Robert HOLTBY**	4 - 10	4:00	
C-14	**Robert HOLTBY**	1	2	Elie Georges DAVID-GNAHOUI	4 - 0	4:00	

Résultats/Results

Pos	Nom/Name
1	Robert HOLTBY, AB
2	Elie Georges DAVID-GNAHOUI, ON

Seniors M Ne-Waza -66kg

Compétiteurs/Competitors A

#	Nom/Name	Grade	Club	1	2	3	G/W	Pts	Pos
1	Daniel MCCRISTALL	Nidan	ON	XX	4	20	2	24	1
2	Adrian SHIMABUKURO	Shodan	ON		XX	20	1	20	2
3	Yaseen KHAN	Brown	ON			XX	0	0	3

Pool A

Match	Blanc/White			Bleu/Blue	Rés/Res	Tmp/Tim	Code
D-4	**Daniel MCCRISTALL**	1	2	Adrian SHIMABUKURO	4 - 0	4:00	
D-9	**Daniel MCCRISTALL**	1	3	Yaseen KHAN	20 - 0	2:23	IPO
D-14	**Adrian SHIMABUKURO**	2	3	Yaseen KHAN	20 - 0	0:50	IPO

Compétiteurs/Competitors B

#	Nom/Name	Grade	Club	4	5	6	G/W	Pts	Pos
4	Caleb TOURANGEAU	Brown	ON	XX	20	20	2	40	1
5	Aj LONTAYAO	Blue	BC		XX	6	1	6	2
6	Eric NELISSEN	Green	ON			XX	0	0	3

Pool B

Match	Blanc/White			Bleu/Blue	Rés/Res	Tmp/Tim	Code
D-5	**Caleb TOURANGEAU**	4	5	Aj LONTAYAO	20 - 0	1:56	IPO
D-10	**Caleb TOURANGEAU**	4	6	Eric NELISSEN	20 - 0	3:40	IPO
D-15	**Aj LONTAYAO**	5	6	Eric NELISSEN	6 - 0	4:00	

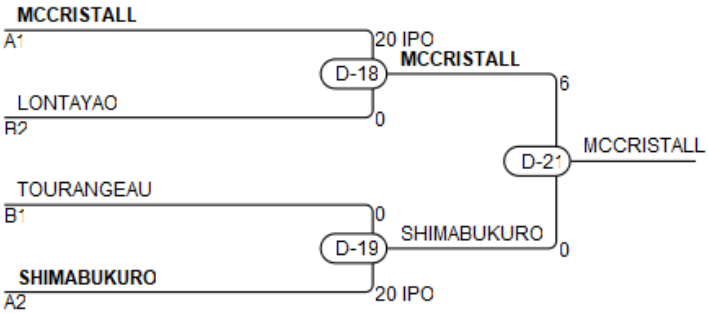

Résultats/Results

Pos	Nom/Name
1	Daniel MCCRISTALL, ON
2	Adrian SHIMABUKURO, ON
3	Aj LONTAYAO, BC
3	Caleb TOURANGEAU, ON

Seniors M Ne-Waza -81kg

Compétiteurs/Competitors

#	Nom/Name	Grade	Club	1	2	3	4	5	G/W	Pts	Pos
1	David GROTTOLI	Green	ON	XX	4		20	20	3	44	2
2	Mubeen GHOURI	Brown	ON		XX			10	1	10	4
3	Mohammad Bakhtiyar HAMZA	Shodan	ON	12	20	XX	20	20	4	72	1
4	Yik Ngai CHEUNG	Green	ON		4		XX	12	2	16	3
5	Adilson ANTONIO	Green	ON					XX	0	0	5

Matchs/Matches

Match	Blanc/White			Bleu/Blue	Rés/Res	Tmp/Tim	Code
E-1	**Yik Ngai CHEUNG**	4	5	Adilson ANTONIO	12 - 2	4:00	
E-2	**David GROTTOLI**	1	2	Mubeen GHOURI	4 - 0	4:00	
E-5	**Mohammad Bakhtiyar HAMZA**	3	4	Yik Ngai CHEUNG	20 - 0	4:00	IPO
E-6	**David GROTTOLI**	1	5	Adilson ANTONIO	20 - 0	1:35	IPO
E-9	Mubeen GHOURI	2	3	**Mohammad Bakhtiyar HAMZA**	0 - 20	1:38	IPO
E-10	**David GROTTOLI**	1	4	Yik Ngai CHEUNG	20 - 4	3:43	IPO
E-13	**Mohammad Bakhtiyar HAMZA**	3	5	Adilson ANTONIO	20 - 0	2:53	IPO
E-14	Mubeen GHOURI	2	4	**Yik Ngai CHEUNG**	0 - 4	4:00	
E-17	David GROTTOLI	1	3	**Mohammad Bakhtiyar HAMZA**	0 - 12	4:00	
E-18	**Mubeen GHOURI**	2	5	Adilson ANTONIO	10 - 6	4:00	

Résultats/Results

Pos	Nom/Name
1	Mohammad Bakhtiyar HAMZA, ON
2	David GROTTOLI, ON
3	Yik Ngai CHEUNG, ON
4	Mubeen GHOURI, ON

U12 F GRP1

Compétiteurs/Competitors

#	Nom/Name	Grade	Club	1	2	3	G/W	Pts	Pos
1	Lizzie BALANDIN	Yellow	ON	XX			0	0	3
2	Clare SCHESNUIK	Yellow	ON	10	XX	10	2	20	1
3	Sara ARIFOV	Yellow	NS	10		XX	1	10	2

Matchs/Matches

Match	Blanc/White			Bleu/Blue	Rés/Res	Tmp/Tim	Code
B-9	Lizzie BALANDIN	1	2	**Clare SCHESNUIK**	0 - 10	0:27	WIP
B-19	Lizzie BALANDIN	1	3	**Sara ARIFOV**	0 - 10	0:42	IPO
B-29	**Clare SCHESNUIK**	2	3	Sara ARIFOV	10 - 0	0:14	IPO

Résultats/Results

Pos	Nom/Name
1	Clare SCHESNUIK, ON
2	Sara ARIFOV, NS

U12 F GRP2

Compétiteurs/Competitors

#	Nom/Name	Grade	Club	1	2	3	4	5	G/W	Pts	Pos
1	Eva WALBY	Green	ON	XX					0	0	5
2	Suad ALIYEVA	Orange	ON	10	XX	10	5		3	25	2
3	Natalie AU	Orange	BC	5		XX			1	5	4
4	Rose PERUSSE	Orange	QC	10		10	XX		2	20	3
5	Taylor TRITTON	Green	QC	10	10	10	10	XX	4	40	1

Matchs/Matches

Match	Blanc/White			Bleu/Blue	Rés/Res	Tmp/Tim	Code
A-1	Rose PERUSSE	4	5	**Taylor TRITTON**	0 - 10	1:10	WIP
A-2	Eva WALBY	1	2	**Suad ALIYEVA**	0 - 10	0:20	WIP
A-7	Natalie AU	3	4	**Rose PERUSSE**	0 - 10	0:38	IPO
A-8	Eva WALBY	1	5	**Taylor TRITTON**	0 - 10	0:18	IPO
A-12	**Suad ALIYEVA**	2	3	Natalie AU	10 - 0	0:05	IPO
A-13	Eva WALBY	1	4	**Rose PERUSSE**	0 - 10	0:30	IPO
A-21	Natalie AU	3	5	**Taylor TRITTON**	0 - 10	0:52	IPO
A-22	**Suad ALIYEVA**	2	4	Rose PERUSSE	5 - 0	2:00	WAZ
A-30	Eva WALBY	1	3	**Natalie AU**	0 - 5	2:00	WAZ
A-31	Suad ALIYEVA	2	5	**Taylor TRITTON**	0 - 10	1:27	WIP

Résultats/Results

Pos	Nom/Name
1	Taylor TRITTON, QC
2	Suad ALIYEVA, ON
3	Rose PERUSSE, QC
4	Natalie AU, BC

U12 F GRP3

Compétiteurs/Competitors

#	Nom/Name	Grade	Club	1	2	3	G/W	Pts	Pos
1	Ksenia OUDOVIKINE	Orange	ON	XX	10	5	2	15	1
2	Claire BOSQUET	Yellow	ON		XX		0	0	3
3	Maleyha KARSERAS	Orange	ON		10	XX	1	10	2

Matchs/Matches

Match	Blanc/White			Bleu/Blue	Rés/Res	Tmp/Tim	Code
B-10	**Ksenia OUDOVIKINE**	1	2	Claire BOSQUET	10 - 0	0:00	KIK
B-20	**Ksenia OUDOVIKINE**	1	3	Maleyha KARSERAS	5 - 0	2:00	WAZ
B-30	Claire BOSQUET	2	3	**Maleyha KARSERAS**	0 - 10	0:00	FUS

Résultats/Results

Pos	Nom/Name
1	Ksenia OUDOVIKINE, ON
2	Maleyha KARSERAS, ON

U12 M GRP1

Compétiteurs/Competitors

#	Nom/Name	Grade	Club	1	2	3	4	G/W	Pts	Pos
1	Ellis NASSAR	Yellow	ON	XX				0	0	4
2	Ron LIVITNOV	Yellow		10	XX			1	10	3
3	Aristotelis CHRISTOPOULOS	Yellow	QC	10	10	XX	5	3	25	1
4	Mohamed BENKHEDOUMA	Orange	QC	10	10		XX	2	20	2

Matchs/Matches

Match	Blanc/White			Bleu/Blue	Rés/Res	Tmp/Tim	Code
B-1	Ellis NASSAR	1	2	**Ron LIVITNOV**	0 - 10	0:24	WIP
B-2	**Aristotelis CHRISTOPOULOS**	3	4	Mohamed BENKHEDOUMA	5 - 0	2:00	WAZ
B-11	Ellis NASSAR	1	3	**Aristotelis CHRISTOPOULOS**	0 - 10	0:22	IPO
B-11A	Ron LIVITNOV	2	4	**Mohamed BENKHEDOUMA**	0 - 10	0:43	IPO
B-21	Ellis NASSAR	1	4	**Mohamed BENKHEDOUMA**	0 - 10	0:38	IPO
B-21A	Ron LIVITNOV	2	3	**Aristotelis CHRISTOPOULOS**	0 - 10	1:47	IPO

Résultats/Results

Pos	Nom/Name
1	Aristotelis CHRISTOPOULOS, QC
2	Mohamed BENKHEDOUMA, QC
3	Ron LIVITNOV,

U12 M GRP2

Compétiteurs/Competitors

#	Nom/Name	Grade	Club	1	2	3	4	G/W	Pts	Pos
1	Azel GUZMAN	Yellow	ON	XX	10	5	5	3	20	1
2	Ioane APTARASHVILI	Yellow	ON		XX			0	0	4
3	Kelian DURETETE	Orange	ON		10	XX	10	2	20	2
4	Orion TELEKI	Orange	ON		10		XX	1	10	3

Matchs/Matches

Match	Blanc/White			Bleu/Blue	Rés/Res	Tmp/Tim	Code
A-3	**Azel GUZMAN**	1	2	Ioane APTARASHVILI	10 - 0	2:00	IPO
A-4	**Kelian DURETETE**	3	4	Orion TELEKI	10 - 0	2:00	IPO
A-14	**Azel GUZMAN**	1	3	Kelian DURETETE	5 - 0	2:00	WAZ
A-15	Ioane APTARASHVILI	2	4	**Orion TELEKI**	0 - 10	1:34	WIP
A-23	**Azel GUZMAN**	1	4	Orion TELEKI	5 - 0	0:40	WAZ
A-24	Ioane APTARASHVILI	2	3	**Kelian DURETETE**	0 - 10	1:47	IPO

Résultats/Results

Pos	Nom/Name
1	Azel GUZMAN, ON
2	Kelian DURETETE, ON
3	Orion TELEKI, ON

U12 M GRP2 (TB)

Compétiteurs/Competitors

#	Nom/Name	Grade	Club	1	2	3	G/W	Pts	Pos
1	Orion TELEKI	Orange	ON	XX			0	0	3
2	Kelian DURETETE	Orange	ON	10	XX		1	10	2
3	Azel GUZMAN	Yellow	ON	5	5	XX	2	10	1

Matchs/Matches

Match	Blanc/White			Bleu/Blue	Rés/Res	Tmp/Tim	Code
A-32	Orion TELEKI	1	2	**Kelian DURETETE**	0 - 10	0:47	IPO
A-33	Orion TELEKI	1	3	**Azel GUZMAN**	0 - 5	0:18	WAZ
A-34	Kelian DURETETE	2	3	**Azel GUZMAN**	0 - 5	0:27	WAZ

Résultats/Results

Pos	Nom/Name
1	Azel GUZMAN, ON
2	Kelian DURETETE, ON

U12 M GRP3

Compétiteurs/Competitors

#	Nom/Name	Grade	Club	1	2	3	4	G/W	Pts	Pos
1	Nikita EVTUKH	Orange	ON	XX				0	0	4
2	Lucas SINENKO	Orange	ON	10	XX			1	10	3
3	Daniyal KUMYKOV	Orange	ON	10	5	XX	10	3	25	1
4	Matthew SIBIRYAKOV	Orange	ON	10	10		XX	2	20	2

Matchs/Matches

Match	Blanc/White			Bleu/Blue	Rés/Res	Tmp/Tim	Code
B-4	Nikita EVTUKH	1	2	**Lucas SINENKO**	0 - 10	2:00	IPO
B-5	**Daniyal KUMYKOV**	3	4	Matthew SIBIRYAKOV	10 - 0	1:39	WIP
B-12	Nikita EVTUKH	1	3	**Daniyal KUMYKOV**	0 - 10	0:52	WIP
B-13	Lucas SINENKO	2	4	**Matthew SIBIRYAKOV**	0 - 10	0:31	IPO
B-22	Nikita EVTUKH	1	4	**Matthew SIBIRYAKOV**	0 - 10	1:42	IPO
B-23	Lucas SINENKO	2	3	**Daniyal KUMYKOV**	0 - 5	2:00	WAZ

Résultats/Results

Pos	Nom/Name
1	Daniyal KUMYKOV, ON
2	Matthew SIBIRYAKOV, ON
3	Lucas SINENKO, ON

U12 M GRP4

Compétiteurs/Competitors

#	Nom/Name	Grade	Club	1	2	3	4	G/W	Pts	Pos
1	Lucas SINENKO	Orange	ON	XX				0	0	4
2	Tikhon PETROCHENKOV	Orange	ON	10	XX	10	5	3	25	1
3	~~Artur AGANOV~~	Yellow	QC			XX		0	0	3
4	Alexey MEJERY	Orange	ON	10		10	XX	2	20	2

Matchs/Matches

Match	Blanc/White			Bleu/Blue	Rés/Res	Tmp/Tim	Code
B-6	Lucas SINENKO	1	2	**Tikhon PETROCHENKOV**	0 - 10	0:00	FUS
B-7	~~Artur AGANOV~~	3	4	**Alexey MEJERY**	0 - 10	0:49	HMD/DHM
B-14	Lucas SINENKO	1	3	~~Artur AGANOV~~	0 - 0	0:00	R/WD
B-15	**Tikhon PETROCHENKOV**	2	4	Alexey MEJERY	5 - 0	2:00	WAZ
B-24	Lucas SINENKO	1	4	**Alexey MEJERY**	0 - 10	0:00	FUS
B-25	**Tikhon PETROCHENKOV**	2	3	~~Artur AGANOV~~	10 - 0	0:00	FUS

Résultats/Results

Pos	Nom/Name
1	Tikhon PETROCHENKOV, ON
2	Alexey MEJERY, ON

U12 M GRP5

Compétiteurs/Competitors

#	Nom/Name	Grade	Club	1	2	3	4	G/W	Pts	Pos
1	Omar KARIMZADA	Yellow	ON	XX			5	1	5	3
2	Prokhor RESHETNIKOV	Orange	ON	10	XX	10	10	3	30	1
3	Nicolas CORTEZ	Yellow	QC	10		XX	10	2	20	2
4	Jadon SMITH	Yellow	ON				XX	0	0	4

Matchs/Matches

Match	Blanc/White			Bleu/Blue	Rés/Res	Tmp/Tim	Code
A-5	Omar KARIMZADA	1	2	**Prokhor RESHETNIKOV**	0 - 10	2:00	IPO
A-6	**Nicolas CORTEZ**	3	4	Jadon SMITH	10 - 0	0:55	IPO
A-16	Omar KARIMZADA	1	3	**Nicolas CORTEZ**	0 - 10	1:56	IPO
A-17	**Prokhor RESHETNIKOV**	2	4	Jadon SMITH	10 - 0	0:45	WIP
A-25	**Omar KARIMZADA**	1	4	Jadon SMITH	5 - 0	2:00	WAZ
A-26	**Prokhor RESHETNIKOV**	2	3	Nicolas CORTEZ	10 - 0	1:31	IPO

Résultats/Results

Pos	Nom/Name
1	Prokhor RESHETNIKOV, ON
2	Nicolas CORTEZ, QC
3	Omar KARIMZADA, ON

U12 M GRP6

Compétiteurs/Competitors

#	Nom/Name	Grade	Club	1	2	3	4	G/W	Pts	Pos
1	David ABRAMOVICH	Green	ON	XX	10	10	10	3	30	1
2	Teimurazi SIDAMONIDZE	Yellow	YT		XX	10		1	10	3
3	Matheus SOARES MENEZES	Yellow	Rio Grande do Norte-BR			XX		0	0	4
4	Anthony Francois BOUERI	Orange	ON		10	10	XX	2	20	2

Matchs/Matches

Match	Blanc/White			Bleu/Blue	Rés/Res	Tmp/Tim	Code
A-9	**David ABRAMOVICH**	1	2	Teimurazi SIDAMONIDZE	10 - 0	0:36	IPO
A-10	Matheus SOARES MENEZES	3	4	**Anthony Francois BOUERI**	0 - 10	2:00	IPO
A-18	**David ABRAMOVICH**	1	3	Matheus SOARES MENEZES	10 - 0	0:28	IPO
A-19	Teimurazi SIDAMONIDZE	2	4	**Anthony Francois BOUERI**	0 - 10	0:59	WIP
A-27	**David ABRAMOVICH**	1	4	Anthony Francois BOUERI	10 - 0	0:29	IPO
A-28	**Teimurazi SIDAMONIDZE**	2	3	Matheus SOARES MENEZES	10 - 0	0:07	IPO

Résultats/Results

Pos	Nom/Name
1	David ABRAMOVICH, ON
2	Anthony Francois BOUERI, ON
3	Teimurazi SIDAMONIDZE, YT

U12 M GRP7

Compétiteurs/Competitors

#	Nom/Name	Grade	Club	1	2	3	4	G/W	Pts	Pos
1	Hachemi Slim REMILA	Yellow	QC	XX		5	10	2	15	2
2	Ahmed HADDOUCHE	Orange	QC	10	XX	5	10	3	25	1
3	Gabrieli KHINGAVA	Yellow	ON			XX	10	1	10	3
4	Ben ALPEROVITCH	Orange	ON				XX	0	0	4

Matchs/Matches

Match	Blanc/White			Bleu/Blue	Rés/Res	Tmp/Tim	Code
B-1	Hachemi Slim REMILA	1	2	**Ahmed HADDOUCHE**	0 - 10	0:35	WIP
B-2	**Gabrieli KHINGAVA**	3	4	Ben ALPEROVITCH	10 - 0	2:00	IPO
B-16	**Hachemi Slim REMILA**	1	3	Gabrieli KHINGAVA	5 - 0	2:00	WAZ
B-17	**Ahmed HADDOUCHE**	2	4	Ben ALPEROVITCH	10 - 0	0:46	IPO
B-26	**Hachemi Slim REMILA**	1	4	Ben ALPEROVITCH	10 - 0	2:00	IPO
B-27	**Ahmed HADDOUCHE**	2	3	Gabrieli KHINGAVA	5 - 0	2:00	WAZ

Résultats/Results

Pos	Nom/Name
1	Ahmed HADDOUCHE, QC
2	Hachemi Slim REMILA, QC
3	Gabrieli KHINGAVA, ON

U12 M GRP8

Compétiteurs/Competitors

#	Nom/Name	Grade	Club	1	2	3	G/W	Pts	Pos
1	Andrey ZAITSAU	Orange	ON	XX	10	10	2	20	1
2	Camilo JUAREZ	Orange	ON		XX	10	1	10	2
3	Bentley HOLMES	Yellow	ON			XX	0	0	3

Matchs/Matches

Match	Blanc/White			Bleu/Blue	Rés/Res	Tmp/Tim	Code
B-8	**Andrey ZAITSAU**	1	2	Camilo JUAREZ	10 - 0	1:14	WIP
B-18	**Andrey ZAITSAU**	1	3	Bentley HOLMES	10 - 0	1:24	IPO
B-28	**Camilo JUAREZ**	2	3	Bentley HOLMES	10 - 0	0:06	IPO

Résultats/Results

Pos	Nom/Name
1	Andrey ZAITSAU, ON
2	Camilo JUAREZ, ON

U12 M GRP9

Compétiteurs/Competitors

#	Nom/Name	Grade	Club	1	2	1	2	1	2	G/W	Pts	Pos
1	Luka BEKAURI	Yellow	ON	XX	10	XX	10	XX		2	20	1
2	James SMYTH CASTILLO	Yellow	ON		XX		XX		XX	0	0	2

Matchs/Matches

Match	Blanc/White			Bleu/Blue	Rés/Res	Tmp/Tim	Code
A-11	**Luka BEKAURI**	1	2	James SMYTH CASTILLO	10 - 0	0:11	IPO
A-20	James SMYTH CASTILLO	2	1	**Luka BEKAURI**	0 - 10	0:38	IPO
A-29	Luka BEKAURI	1	2	James SMYTH CASTILLO			

Résultats/Results

Pos	Nom/Name
1	Luka BEKAURI, ON

Veterans M Ne-Waza -100kg

Compétiteurs/Competitors A

#	Nom/Name	Grade	Club	1	2	3	4	G/W	Pts	Pos
1	Steven BELL	Green	ON	XX			6	1	6	3
2	Justin CHIN	Green	ON	20	XX	20	20	3	60	1
3	Richard LINDO	Sandan	ON	20		XX	20	2	40	2
4	Mikel DELMAS	Brown	ON				XX	0	0	4

Pool A

Match	Blanc/White			Bleu/Blue	Rés/Res	Tmp/Tim	Code
C-1	Steven BELL	1	2	**Justin CHIN**	0 - 20	3:21	HAN
C-2	**Richard LINDO**	3	4	Mikel DELMAS	20 - 0	0:00	FUS
C-6	Steven BELL	1	3	**Richard LINDO**	0 - 20	0:00	FUS
C-7	**Justin CHIN**	2	4	Mikel DELMAS	20 - 0	0:00	FUS
C-11	**Steven BELL**	1	4	Mikel DELMAS	6 - 0	4:00	
C-12	**Justin CHIN**	2	3	Richard LINDO	20 - 0	0:52	IPO

Compétiteurs/Competitors B

#	Nom/Name	Grade	Club	5	6	7	G/W	Pts	Pos
5	Shawnisty BUDWEG	Shodan	ON	XX	20	20	2	40	1
6	Sean PATRICK	Brown	ON		XX	10	1	10	2
7	Felipe MAXIMIANO AMORIM DI	Green	ON			XX	0	0	3

Pool B

Match	Blanc/White			Bleu/Blue	Rés/Res	Tmp/Tim	Code
C-3	**Shawnisty BUDWEG**	5	6	Sean PATRICK	20 - 0	2:40	IPO
C-8	**Shawnisty BUDWEG**	5	7	Felipe MAXIMIANO AMORIM DIAS	20 - 0	4:00	IPO
C-13	**Sean PATRICK**	6	7	Felipe MAXIMIANO AMORIM DIAS	10 - 0	4:00	

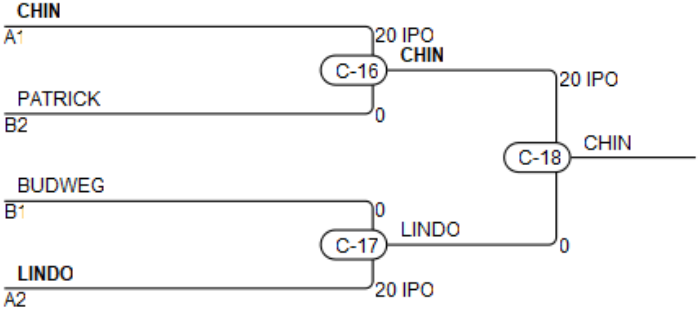

Résultats/Results

Pos	Nom/Name
1	Justin CHIN, ON
2	Richard LINDO, ON
3	Sean PATRICK, ON
3	Shawnisty BUDWEG, ON

Veterans M Ne-Waza -81kg

Compétiteurs/Competitors A

#	Nom/Name	Grade	Club	1	2	3	4	G/W	Pts	Pos
1	Paul KELLY	Brown	ON	XX		20		1	20	3
2	Riccardo FRONTE	Green	ON	12	XX	20		2	32	2
3	Jamie Michael CASINO	Brown	ON			XX		0	0	4
4	Mario Leidson PIMENTA FAGU	Nidan	ON	14	2	20	XX	3	36	1

Pool A

Match	Blanc/White			Bleu/Blue	Rés/Res	Tmp/Tim	Code
D-1	Paul KELLY	1	2	**Riccardo FRONTE**	0 - 12	4:00	
D-2	Jamie Michael CASINO	3	4	**Mario Leidson PIMENTA FAGUNDES**	0 - 20	0:00	IPO
D-6	**Paul KELLY**	1	3	Jamie Michael CASINO	20 - 0	0:00	IPO
D-7	Riccardo FRONTE	2	4	**Mario Leidson PIMENTA FAGUNDES**	0 - 2	4:00	
D-11	Paul KELLY	1	4	**Mario Leidson PIMENTA FAGUNDES**	0 - 14	4:00	
D-12	**Riccardo FRONTE**	2	3	Jamie Michael CASINO	20 - 0	0:00	IPO

Compétiteurs/Competitors B

#	Nom/Name	Grade	Club	5	6	7	G/W	Pts	Pos
5	David SLADE	Green	ON	XX	20		1	20	2
6	Eric GUY	Shodan	ON		XX		0	0	3
7	Jacob SMITH	Sandan	ON	4	20	XX	2	24	1

Pool B

Match	Blanc/White			Bleu/Blue	Rés/Res	Tmp/Tim	Code
D-3	**David SLADE**	5	6	Eric GUY	20 - 0	2:47	IPO
D-8	David SLADE	5	7	**Jacob SMITH**	0 - 4	4:00	
D-13	Eric GUY	6	7	**Jacob SMITH**	0 - 20	0:30	IPO

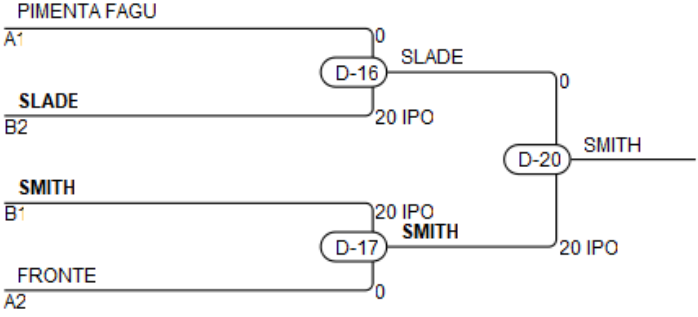

Résultats/Results

Pos	Nom/Name
1	Jacob SMITH, ON
2	David SLADE, ON
3	Mario Leidson PIMENTA FAGUNDES, ON
3	Riccardo FRONTE, ON

Veterans M Ne-Waza +100kg

Compétiteurs/Competitors A

#	Nom/Name	Grade	Club	1	2	3	G/W	Pts	Pos
1	Shashank NANIVADEKAR	Green	ON	XX			0	0	3
2	Guilherme FERREIRA MONTERO	Brown	ON	20	XX		1	20	2
3	Jeff ALLEN	Shodan	ON	20	20	XX	2	40	1

Pool A

Match	Blanc/White			Bleu/Blue	Rés/Res	Tmp/Tim	Code
E-3	Shashank NANIVADEKAR	1	2	**Guilherme FERREIRA MONTERO**	0 - 20	0:59	IPO
E-7	Shashank NANIVADEKAR	1	3	**Jeff ALLEN**	0 - 20	0:23	IPO
E-11	Guilherme FERREIRA MONTERO	2	3	**Jeff ALLEN**	0 - 20	1:42	IPO

Compétiteurs/Competitors B

#	Nom/Name	Grade	Club	4	5	6	G/W	Pts	Pos
4	Terry ST LOUIS	Brown	ON	XX			0	0	3
5	Kostantinos CHANTZIARAS	Green	ON	20	XX	20	2	40	1
6	Mark WILSON	Shodan	ON	16		XX	1	16	2

Pool B

Match	Blanc/White			Bleu/Blue	Rés/Res	Tmp/Tim	Code
E-4	Terry ST LOUIS	4	5	**Kostantinos CHANTZIARAS**	0 - 20	0:19	IPO
E-8	Terry ST LOUIS	4	6	**Mark WILSON**	0 - 16	4:00	
E-12	**Kostantinos CHANTZIARAS**	5	6	Mark WILSON	20 - 0	3:50	IPO

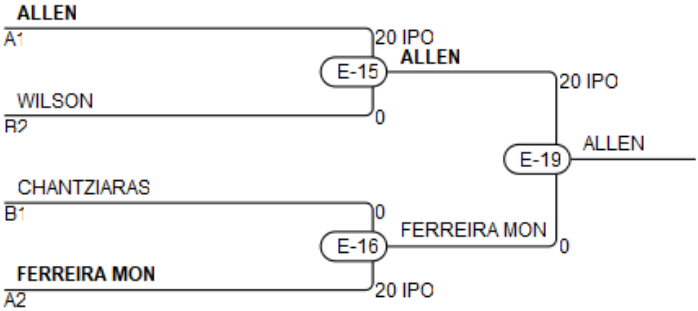

Résultats/Results

Pos	Nom/Name
1	Jeff ALLEN, ON
2	Guilherme FERREIRA MONTERO, ON
3	Mark WILSON, ON
3	Kostantinos CHANTZIARAS, ON

U14 F -48kg

Competitors

#	Name	Grade	Club	1	2	3	4	5	Wins	Pts	Pos
1	KHAN Sumayya	Green	Sheffield	XX					0	0	5
2	SCORTEANU Laura	Green	Shidokan	10	XX	1	5	10	4	26	1
3	AU Megan	Green	Peak Judo Club	10		XX	10	10	3	30	2
4	CUKIER Hannah	Blue	Kawasaki	10			XX		1	10	4
5	SANCHEZ Katalina	Green	Kawasaki	10			10	XX	2	20	3

Matches

Match	White			Blue	Result	Time	Code
D-1	CUKIER Hannah	4	5	**SANCHEZ Katalina**	0 - 10	1:24	IPO
D-15A	KHAN Sumayya	1	2	**SCORTEANU Laura**	0 - 10	1:40	WIP
D-5	**AU Megan**	3	4	CUKIER Hannah	10 - 0	1:23	IPO
D-6	KHAN Sumayya	1	5	**SANCHEZ Katalina**	0 - 10	0:18	IPO
D-9	**SCORTEANU Laura**	2	3	AU Megan	1 - 0	0:00	YUS
D-10	KHAN Sumayya	1	4	**CUKIER Hannah**	0 - 10	0:27	IPO
D-16	**AU Megan**	3	5	SANCHEZ Katalina	10 - 0	2:30	WIP
D-17	**SCORTEANU Laura**	2	4	CUKIER Hannah	5 - 0	2:00	WAZ
D-23	KHAN Sumayya	1	3	**AU Megan**	0 - 10	2:01	WIP
D-24	**SCORTEANU Laura**	2	5	SANCHEZ Katalina	10 - 0	2:50	IPO

Results

Pos	Name
1	SCORTEANU Laura, Shidokan
2	AU Megan, Peak Judo Club
3	SANCHEZ Katalina, Kawasaki
4	CUKIER Hannah, Kawasaki

U14 F -57kg

Competitors

#	Name	Grade	Club	1	2	3	4	Wins	Pts	Pos
1	TRITTON Emma	Green	Tritton	XX	10	1	10	3	21	1
2	PERUSSE Juliette	Green	Sakura (QC)		XX	1	10	2	11	2
3	FERREIRA Alicia Vitoria	Green	Nagashima			XX		0	0	4
4	LAVOIE Maxim	Green	Beauport			10	XX	1	10	3

Matches

Match	White			Blue	Result	Time	Code
C-3	**TRITTON Emma**	1	2	PERUSSE Juliette	10 - 0	1:20	IPO
C-4	FERREIRA Alicia Vitoria	3	4	**LAVOIE Maxim**	0 - 10	2:29	IPO
C-11	**TRITTON Emma**	1	3	FERREIRA Alicia Vitoria	1 - 0	6:00	YUS
C-12	**PERUSSE Juliette**	2	4	LAVOIE Maxim	10 - 0	0:30	IPO
C-21	**TRITTON Emma**	1	4	LAVOIE Maxim	10 - 0	0:05	IPO
C-22	**PERUSSE Juliette**	2	3	FERREIRA Alicia Vitoria	1 - 0	6:00	YUS

Results

Pos	Name
1	TRITTON Emma, Tritton
2	PERUSSE Juliette, Sakura (QC)
3	LAVOIE Maxim, Beauport

U14 F -63kg

Competitors

#	Name	Grade	Club	1	Wins	Pts	Pos
1	SUMMERS Victoria	Blue	Ajax Budokan	XX	0	0	1

Matches

Match	White	Blue	Result	Time	Code

Results

Pos	Name

U14 M -35kg

Competitors A

#	Name	Grade	Club	1	2	3	4	Wins	Pts	Pos
1	FILAOUANE Zinedine	Green	St. Léonard	XX	5		10	2	15	3
2	DEMENEV Peter	Green	Olympic		XX	10	10	2	20	1
3	TAMURA Grayson	Green	Lethbridge	10		XX	10	2	20	2
4	NASSAR Zackary	Green	Asahi				XX	0	0	4

Matches A

Match	White			Blue	Result	Time	Code
C-5	**FILAOUANE Zinedine**	1	2	DEMENEV Peter	5 - 0	3:00	WAZ
C-6	**TAMURA Grayson**	3	4	NASSAR Zackary	10 - 0	0:45	WIP
C-15	FILAOUANE Zinedine	1	3	**TAMURA Grayson**	0 - 10	2:08	IPO
C-16	**DEMENEV Peter**	2	4	NASSAR Zackary	10 - 0	1:38	WIP
C-23	**FILAOUANE Zinedine**	1	4	NASSAR Zackary	10 - 0	1:44	IPO
C-24	**DEMENEV Peter**	2	3	TAMURA Grayson	10 - 0	2:15	HAN

Competitors B

#	Name	Grade	Club	5	6	7	Wins	Pts	Pos
5	NASSAR Ashton	Green	Asahi	XX	10		1	10	2
6	SHUSTERMAN Shon	Green	Taifu		XX		0	0	3
7	LI Alexander	Green	Ippon	10	10	XX	2	20	1

Matches B

Match	White			Blue	Result	Time	Code
C-9	**NASSAR Ashton**	5	6	SHUSTERMAN Shon	10 - 0	0:28	IPO
C-17	NASSAR Ashton	5	7	**LI Alexander**	0 - 10	0:12	IPO
C-25	SHUSTERMAN Shon	6	7	**LI Alexander**	0 - 10	0:04	IPO

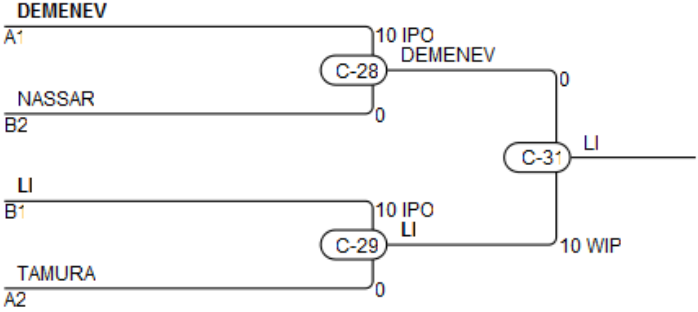

Results

Pos	Name
1	LI Alexander, Ippon
2	DEMENEV Peter, Olympic
3	NASSAR Ashton, Asahi
3	TAMURA Grayson, Lethbridge

U14 M -38kg

Competitors A

#	Name	Grade	Club	1	2	3	Wins	Pts	Pos
1	GACESA Alex	Blue	Sheffield	XX	10		1	10	2
2	TAJEDDINE Victor	Green	Chu's Martial Art's Worl		XX		0	0	3
3	LE BRIS Ewen	Green	Peak Judo Club	10	10	XX	2	20	1

Matches A

Match	White			Blue	Result	Time	Code
D-3	**GACESA Alex**	1	2	TAJEDDINE Victor	10 - 0	2:12	IPO
D-14	GACESA Alex	1	3	**LE BRIS Ewen**	0 - 10	0:42	WIP
D-21	TAJEDDINE Victor	2	3	**LE BRIS Ewen**	0 - 10	0:05	IPO

Competitors B

#	Name	Grade	Club	4	5	6	Wins	Pts	Pos
4	BARCLAY Grayson	Green	Asahi	XX	10		1	10	2
5	LEONARD Felix	Green	Moose Jaw		XX		0	0	3
6	LESON Brayden	Green	White Tiger Judo	10	10	XX	2	20	1

Matches B

Match	White			Blue	Result	Time	Code
D-4	**BARCLAY Grayson**	4	5	LEONARD Felix	10 - 0	2:29	IPO
D-15	BARCLAY Grayson	4	6	**LESON Brayden**	0 - 10	0:37	IPO
D-22	LEONARD Felix	5	6	**LESON Brayden**	0 - 10	3:00	IPO

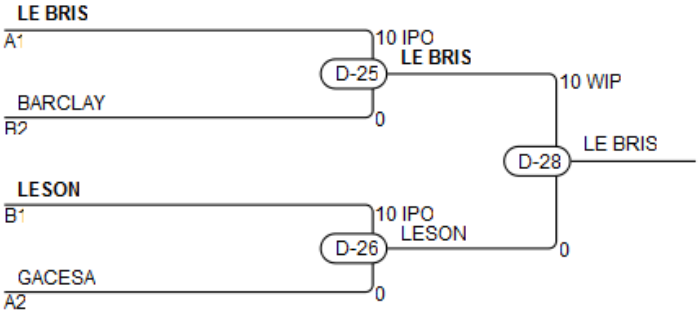

Results

Pos	Name
1	LE BRIS Ewen, Peak Judo Club
2	LESON Brayden, White Tiger Judo
3	BARCLAY Grayson, Asahi
3	GACESA Alex, Sheffield

U14 M -42kg

Competitors

#	Name	Grade	Club	1	2	3	4	5	Wins	Pts	Pos
1	MIRON Alexis	Green	Shawinigan	XX					0	0	5
2	REXHEPI Santiago Alvaro	Blue	Hayabusakan	10	XX	10	10	10	4	40	1
3	KHAHAN ZAMORA Ashkan	Green	Tritton	10		XX	10	10	3	30	2
4	TEPLITSKIY Roman	Green	Taifu	10			XX		1	10	4
5	KHILOV Maksim	Green	Taifu	10			10	XX	2	20	3

Matches

Match	White			Blue	Result	Time	Code
E-3	TEPLITSKIY Roman	4	5	**KHILOV Maksim**	0 - 10	1:43	IPO
E-4	MIRON Alexis	1	2	**REXHEPI Santiago Alvaro**	0 - 10	1:24	IPO
E-7	**KHAHAN ZAMORA Ashkan**	3	4	TEPLITSKIY Roman	10 - 0	1:43	IPO
E-8	MIRON Alexis	1	5	**KHILOV Maksim**	0 - 10	1:19	IPO
E-14	**REXHEPI Santiago Alvaro**	2	3	KHAHAN ZAMORA Ashkan	10 - 0	2:02	IPO
E-15	MIRON Alexis	1	4	**TEPLITSKIY Roman**	0 - 10	0:52	IPO
E-21	**KHAHAN ZAMORA Ashkan**	3	5	KHILOV Maksim	10 - 0	2:00	WIP
E-22	**REXHEPI Santiago Alvaro**	2	4	TEPLITSKIY Roman	10 - 0	0:55	IPO
E-28	MIRON Alexis	1	3	**KHAHAN ZAMORA Ashkan**	0 - 10	1:41	IPO
E-29	**REXHEPI Santiago Alvaro**	2	5	KHILOV Maksim	10 - 0	1:24	IPO

Results

Pos	Name
1	REXHEPI Santiago Alvaro, Hayabusakan
2	KHAHAN ZAMORA Ashkan, Tritton
3	KHILOV Maksim, Taifu
4	TEPLITSKIY Roman, Taifu

U14 M -46kg

Competitors

#	Name	Grade	Club	1	2	1	2	1	2	Wins	Pts	Pos
1	BUDWEG Chase	Green	Huntsville	XX		XX		XX		0	0	2
2	MAKHATADZE Gabrieli	Green	Olympic	10	XX	10	XX		XX	2	20	1

Matches

Match	White			Blue	Result	Time	Code
E-11	BUDWEG Chase	1	2	**MAKHATADZE Gabrieli**	0 - 10	0:19	IPO
E-18	**MAKHATADZE Gabrieli**	2	1	BUDWEG Chase	10 - 0	0:31	IPO
E-25	BUDWEG Chase	1	2	MAKHATADZE Gabrieli			

Results

Pos	Name
1	MAKHATADZE Gabrieli, Olympic

U14 M -55kg

Competitors

#	Name	Grade	Club	1	2	3	4	Wins	Pts	Pos
1	NATSVLISHVILI Giorgi	Green	Olympic	XX		10	10	2	20	2
2	ALIZADA Jasur	Green	Olympic	10	XX	10	10	3	30	1
3	TCHERNIKOVSKY Dan	Green	Taifu			XX		0	0	4
4	UDEBASHVILI David	Green	Taifu			10	XX	1	10	3

Matches

Match	White			Blue	Result	Time	Code
D-7	NATSVLISHVILI Giorgi	1	2	**ALIZADA Jasur**	0 - 10	0:57	WIP
D-8	TCHERNIKOVSKY Dan	3	4	**UDEBASHVILI David**	0 - 10	2:41	IPO
D-12	**NATSVLISHVILI Giorgi**	1	3	TCHERNIKOVSKY Dan	10 - 0	1:48	IPO
D-13	**ALIZADA Jasur**	2	4	UDEBASHVILI David	10 - 0	2:49	IPO
D-19	**NATSVLISHVILI Giorgi**	1	4	UDEBASHVILI David	10 - 0	1:50	WIP
D-20	**ALIZADA Jasur**	2	3	TCHERNIKOVSKY Dan	10 - 0	0:54	IPO

Results

Pos	Name
1	ALIZADA Jasur, Olympic
2	NATSVLISHVILI Giorgi, Olympic
3	UDEBASHVILI David, Taifu

U14 M -60kg

Competitors

#	Name	Grade	Club	1	2	3	4	Wins	Pts	Pos
1	SOKOLOV Emelyan	Green	Taifu	XX	10	10	10	3	30	1
2	GABRIELE Lucas	Green	Judo Kai		XX			0	0	4
3	ARIFOV Umar	Green	Numa		10	XX	10	2	20	2
4	NELISSEN Jonas	Blue	Midtown Judo - Kiyomizuk		10		XX	1	10	3

Matches

Match	White			Blue	Result	Time	Code
E-9	**SOKOLOV Emelyan**	1	2	GABRIELE Lucas	10 - 0	0:12	IPO
E-10	**ARIFOV Umar**	3	4	NELISSEN Jonas	10 - 0	1:29	HAN
E-16	**SOKOLOV Emelyan**	1	3	ARIFOV Umar	10 - 0	1:03	WIP
E-17	GABRIELE Lucas	2	4	**NELISSEN Jonas**	0 - 10	1:49	IPO
E-23	**SOKOLOV Emelyan**	1	4	NELISSEN Jonas	10 - 0	2:30	IPO
E-24	GABRIELE Lucas	2	3	**ARIFOV Umar**	0 - 10	2:10	IPO

Results

Pos	Name
1	SOKOLOV Emelyan, Taifu
2	ARIFOV Umar, Numa
3	NELISSEN Jonas, Midtown Judo - Kiyomizukan

U14 M +66kg

Competitors

#	Name	Grade	Club	1	2	1	2	1	2	Wins	Pts	Pos
1	JUAREZ TORRES Daniel	Green	Sheffield	XX		XX		XX		0	0	2
2	OUDOVIKINE Daniel	Green	Taifu	10	XX	10	XX		XX	2	20	1

Matches

Match	White			Blue	Result	Time	Code
C-10	JUAREZ TORRES Daniel	1	2	**OUDOVIKINE Daniel**	0 - 10	0:51	WIP
C-20	**OUDOVIKINE Daniel**	2	1	JUAREZ TORRES Daniel	10 - 0	2:12	IPO
C-30	JUAREZ TORRES Daniel	1	2	OUDOVIKINE Daniel			

Results

Pos	Name
1	OUDOVIKINE Daniel, Taifu

Veterans F -78kg

Competitors

#	Name	Grade	Club	1	Wins	Pts	Pos
1	ELLIOTT Robyn	Shodan	Cloverdale	XX	0	0	1

Matches

Match	White	Blue	Result	Time	Code

Results

Pos	Name

Veterans M1M3 -81kg

Competitors A

#	Name	Grade	Club	1	2	3	4	Wins	Pts	Pos
1	WAT Ivan	Blue	Action & Reaction	XX	10			1	10	3
2	CASINO Jamie Michael	Brown	Judo Kai		XX			0	0	4
3	LEE Sanghoon	Nidan	Kokushikai	10	10	XX	5	3	25	1
4	PIMENTA FAGUNDES Mario Lei	Nidan	Higashi Canada	10	10		XX	2	20	2

Matches A

Match	White			Blue	Result	Time	Code
A-1	**WAT Ivan**	1	2	CASINO Jamie Michael	10 - 0	0:17	IPO
A-2	**LEE Sanghoon**	3	4	PIMENTA FAGUNDES Mario Leidson	5 - 0	3:00	WAZ
A-9	WAT Ivan	1	3	**LEE Sanghoon**	0 - 10	1:30	IPO
A-10	CASINO Jamie Michael	2	4	**PIMENTA FAGUNDES Mario Leidson**	0 - 10	1:32	IPO
A-17	WAT Ivan	1	4	**PIMENTA FAGUNDES Mario Leidson**	0 - 10	0:23	IPO
A-18	CASINO Jamie Michael	2	3	**LEE Sanghoon**	0 - 10	1:34	IPO

Competitors B

#	Name	Grade	Club	5	6	7	Wins	Pts	Pos
5	KELLY Paul	Brown	Higashi Canada	XX		10	1	10	2
6	RANGOO Shaun	Shodan	Dyman	5	XX	10	2	15	1
7	LI Eugene	Blue	Asahi			XX	0	0	3

Matches B

Match	White			Blue	Result	Time	Code
A-3	KELLY Paul	5	6	**RANGOO Shaun**	0 - 5	3:00	WAZ
A-11	**KELLY Paul**	5	7	LI Eugene	10 - 0	1:25	WIP
A-19	**RANGOO Shaun**	6	7	LI Eugene	10 - 0	0:38	IPO

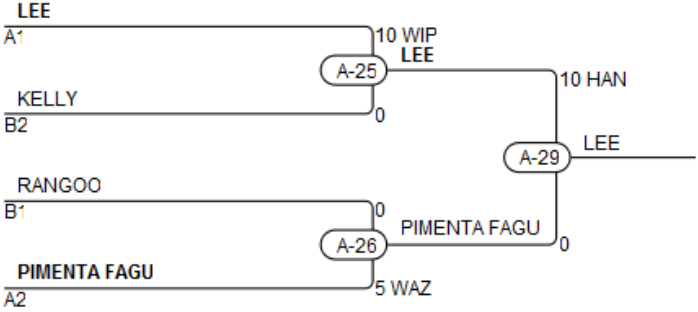

Results

Pos	Name
1	LEE Sanghoon, Kokushikai
2	PIMENTA FAGUNDES Mario Leidson, Higashi Canad
3	KELLY Paul, Higashi Canada
3	RANGOO Shaun, Dyman

Veterans M1M3 -90kg

Competitors A

#	Name	Grade	Club	1	2	3	4	Wins	Pts	Pos
1	KURPJUWEIT Robin	Brown	Medicine Hat	XX	10	10		2	20	2
2	PATRICK Sean	Brown	Hayabusakan		XX			0	0	4
3	BAGASAN Sacha	Blue	Kohbukan-Sisu		10	XX		1	10	3
4	UZOKA Ugo	Shodan	Hayabusakan	10	10	10	XX	3	30	1

Matches A

Match	White			Blue	Result	Time	Code
A-4	**KURPJUWEIT Robin**	1	2	PATRICK Sean	10 - 0	0:59	IPO
A-5	BAGASAN Sacha	3	4	**UZOKA Ugo**	0 - 10	0:35	IPO
A-12	**KURPJUWEIT Robin**	1	3	BAGASAN Sacha	10 - 0	1:32	IPO
A-13	PATRICK Sean	2	4	**UZOKA Ugo**	0 - 10	1:09	IPO
A-20	KURPJUWEIT Robin	1	4	**UZOKA Ugo**	0 - 10	1:25	IPO
A-21	PATRICK Sean	2	3	**BAGASAN Sacha**	0 - 10	0:16	IPO

Competitors B

#	Name	Grade	Club	5	6	7	Wins	Pts	Pos
5	LUPANCIUC Dumitru	Brown	Hayabusakan	XX		5	1	5	2
6	BENA Jean-Remy	Brown	Hayabusakan	10	XX	10	2	20	1
7	MCNAIRN Kyle	Brown	Takahashi			XX	0	0	3

Matches B

Match	White			Blue	Result	Time	Code
A-6	LUPANCIUC Dumitru	5	6	**BENA Jean-Remy**	0 - 10	0:41	IPO
A-14	**LUPANCIUC Dumitru**	5	7	MCNAIRN Kyle	5 - 0	3:00	WAZ
A-22	**BENA Jean-Remy**	6	7	MCNAIRN Kyle	10 - 0	1:15	IPO

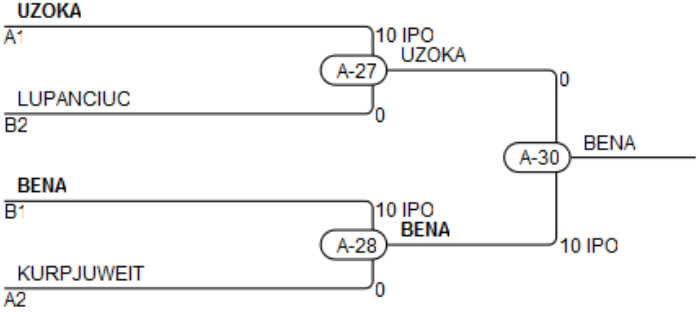

Results

Pos	Name
1	BENA Jean-Remy, Hayabusakan
2	UZOKA Ugo, Hayabusakan
3	LUPANCIUC Dumitru, Hayabusakan
3	KURPJUWEIT Robin, Medicine Hat

Veterans M1M4 +100kg

Competitors

#	Name	Grade	Club	1	2	3	4	Wins	Pts	Pos
1	ALLEN Jeff	Shodan	Huntsville	XX	10	10	10	3	30	1
2	ST LOUIS Terry	Brown	Huntsville		XX	10		1	10	3
3	~~WILSON Mark~~	Shodan	Tora			XX		0	0	4
4	FERREIRA MONTERO Guilherme	Brown	Higashi Canada		10	10	XX	2	20	2

Matches

Match	White			Blue	Result	Time	Code
A-7	**ALLEN Jeff**	1	2	ST LOUIS Terry	10 - 0	1:31	WIP
A-8	~~WILSON Mark~~	3	4	**FERREIRA MONTERO Guilherme**	0 - 10	0:00	IPO
A-15	**ALLEN Jeff**	1	3	~~WILSON Mark~~	10 - 0	0:00	IPO
A-16	ST LOUIS Terry	2	4	**FERREIRA MONTERO Guilherme**	0 - 10	0:35	WIP
A-23	**ALLEN Jeff**	1	4	FERREIRA MONTERO Guilherme	10 - 0	1:30	IPO
A-24	**ST LOUIS Terry**	2	3	~~WILSON Mark~~	10 - 0	0:00	IPO

Results

Pos	Name
1	ALLEN Jeff, Huntsville
2	FERREIRA MONTERO Guilherme, Higashi Canada
3	ST LOUIS Terry, Huntsville

Veterans M1M6 -100kg

Competitors

#	Name	Grade	Club	1	2	3	4	5	Wins	Pts	Pos
1	NAJAFE Mohammad Monir	Brown	Midtown Judo - Kiyomizuk	XX		10			1	10	4
2	DELMAS Mikel	Brown	Full Circle	10	XX	10	10		3	30	2
3	COUGHLAN Craig	Brown	Hiro's			XX			0	0	5
4	KING Michael	Blue	Kawasaki	10		10	XX		2	20	3
5	LINDO Richard	Sandan	Kawasaki	10	10	10	10	XX	4	40	1

Matches

Match	White			Blue	Result	Time	Code
C-1	KING Michael	4	5	**LINDO Richard**	0 - 10	1:10	IPO
C-2	NAJAFE Mohammad Monir	1	2	**DELMAS Mikel**	0 - 10	2:16	WIP
C-7	COUGHLAN Craig	3	4	**KING Michael**	0 - 10	0:14	IPO
C-8	NAJAFE Mohammad Monir	1	5	**LINDO Richard**	0 - 10	0:41	IPO
C-13	**DELMAS Mikel**	2	3	COUGHLAN Craig	10 - 0	1:06	IPO
C-14	NAJAFE Mohammad Monir	1	4	**KING Michael**	0 - 10	0:42	IPO
C-18	COUGHLAN Craig	3	5	**LINDO Richard**	0 - 10	1:34	IPO
C-19	**DELMAS Mikel**	2	4	KING Michael	10 - 0	1:34	IPO
C-26	**NAJAFE Mohammad Monir**	1	3	COUGHLAN Craig	10 - 0	3:00	WIP
C-27	DELMAS Mikel	2	5	**LINDO Richard**	0 - 10	4:03	HAN

Results

Pos	Name
1	LINDO Richard, Kawasaki
2	DELMAS Mikel, Full Circle
3	KING Michael, Kawasaki
4	NAJAFE Mohammad Monir, Midtown Judo - Kiyomiz

Veterans M1M6 -73kg

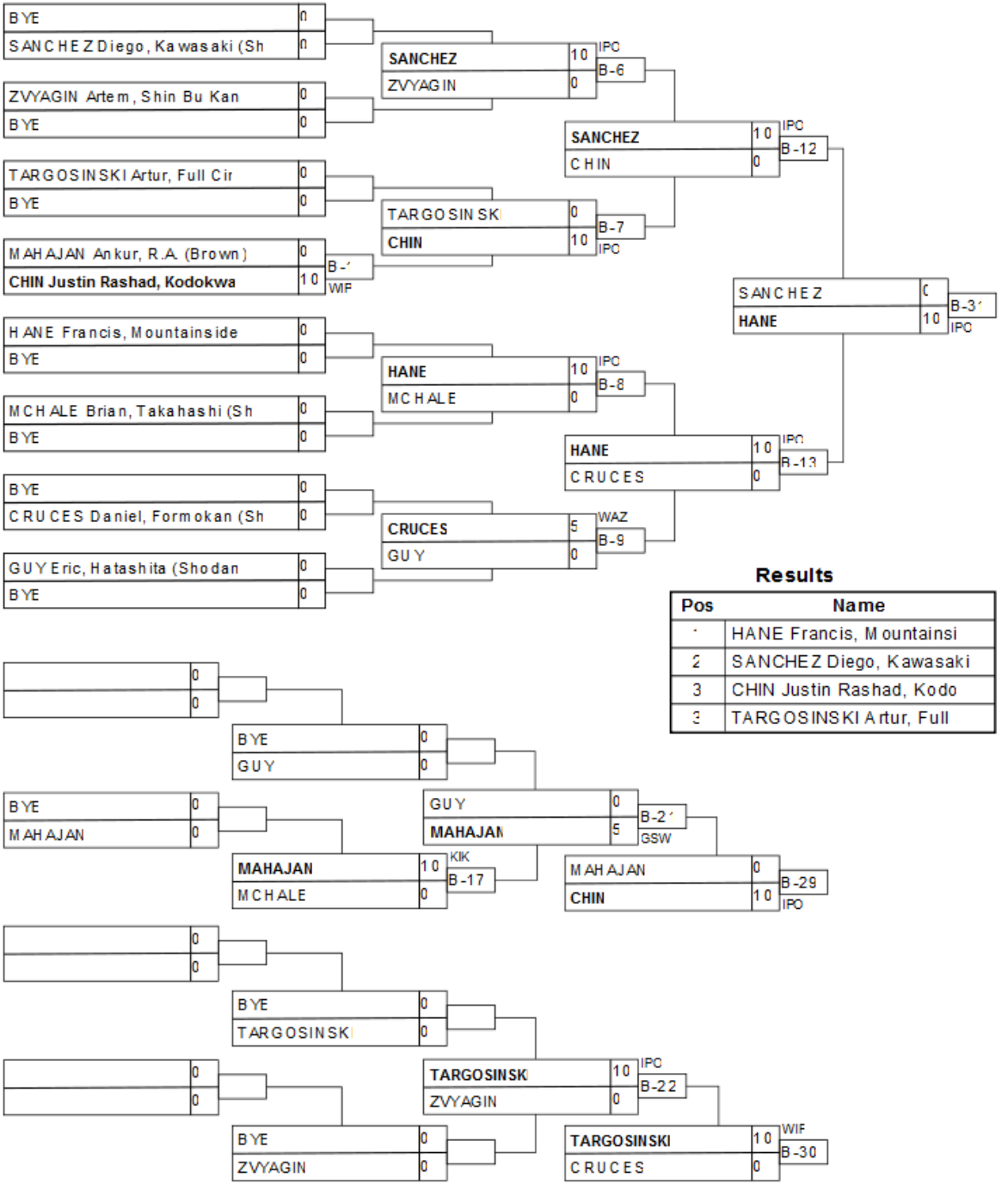

Results

Pos	Name
1	HANE Francis, Mountainsi
2	SANCHEZ Diego, Kawasaki
3	CHIN Justin Rashad, Kodo
3	TARGOSINSKI Artur, Full

Veterans M4M5 -81kg

Competitors A

#	Name	Grade	Club	1	2	3	Wins	Pts	Pos
1	SERGIENKO Ivan	Shodan	Shin Bu Kan (ON)	XX			0	0	3
2	MONZON Jose	Shodan	Action & Reaction	10	XX		1	10	2
3	SMITH Jacob	Sandan	Dyman	10	10	XX	2	20	1

Matches A

Match	White			Blue	Result	Time	Code
B-4	SERGIENKO Ivan	1	2	**MONZON Jose**	0 - 10	0:54	IPO
B-16	SERGIENKO Ivan	1	3	**SMITH Jacob**	0 - 10	0:42	IPO
B-23	MONZON Jose	2	3	**SMITH Jacob**	0 - 10	3:00	IPO

Competitors B

#	Name	Grade	Club	4	5	6	Wins	Pts	Pos
4	STOJANOV Melvin	Brown	Shin Bu Kan (ON)	XX			0	0	3
5	FRONTE Riccardo	Green	Dyman	5	XX		1	5	2
6	SHEARHART Paul	Shodan	Shin Bu Kan (ON)	10	10	XX	2	20	1

Matches B

Match	White			Blue	Result	Time	Code
B-5	STOJANOV Melvin	4	5	**FRONTE Riccardo**	0 - 5	3:00	WAZ
B-18	STOJANOV Melvin	4	6	**SHEARHART Paul**	0 - 10	0:33	IPO
B-24	FRONTE Riccardo	5	6	**SHEARHART Paul**	0 - 10	0:27	IPO

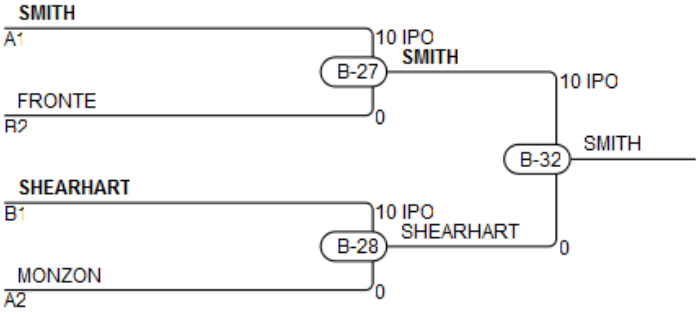

Results

Pos	Name
1	SMITH Jacob, Dyman
2	SHEARHART Paul, Shin Bu Kan (ON)
3	FRONTE Riccardo, Dyman
3	MONZON Jose, Action & Reaction

Veterans M4M7 -90kg

Competitors

#	Name	Grade	Club	1	2	3	4	5	Wins	Pts	Pos
1	JAIKARAN Stephen	Shodan	Hatashita	XX			10		1	10	4
2	VELEZ Eric	Brown	Midtown Judo - Kiyomizuk	10	XX			10	2	20	2
3	SHATKO Taras	Shodan	Higashi Canada	10	10	XX	10	10	4	40	1
4	MOSKAL Piotr	Brown	Shin Bu Kan (ON)		10		XX		1	10	5
5	KIORESKOU Serguei	Brown	Shin Bu Kan (ON)	5			10	XX	2	15	3

Matches

Match	White			Blue	Result	Time	Code
B-2	MOSKAL Piotr	4	5	**KIORESKOU Serguei**	0 - 10	1:00	IPO
B-3	JAIKARAN Stephen	1	2	**VELEZ Eric**	0 - 10	2:22	HAN
B-10	**SHATKO Taras**	3	4	MOSKAL Piotr	10 - 0	0:50	IPO
B-11	JAIKARAN Stephen	1	5	**KIORESKOU Serguei**	0 - 5	2:00	WAZ
B-14	VELEZ Eric	2	3	**SHATKO Taras**	0 - 10	1:10	IPO
B-15	**JAIKARAN Stephen**	1	4	MOSKAL Piotr	10 - 0	0:54	WIP
B-19	**SHATKO Taras**	3	5	KIORESKOU Serguei	10 - 0	0:43	IPO
B-20	VELEZ Eric	2	4	**MOSKAL Piotr**	0 - 10	3:01	GSI
B-25	JAIKARAN Stephen	1	3	**SHATKO Taras**	0 - 10	0:32	IPO
B-26	**VELEZ Eric**	2	5	KIORESKOU Serguei	10 - 0	0:19	IPO

Results

Pos	Name
1	SHATKO Taras, Higashi Canada
2	VELEZ Eric, Midtown Judo - Kiyomizukan
3	KIORESKOU Serguei, Shin Bu Kan (ON)
4	JAIKARAN Stephen, Hatashita
5	MOSKAL Piotr, Shin Bu Kan (ON)

U18 F -44kg

Competitors

#	Name	Grade	Club	1	Wins	Pts	Pos
1	FIAES Alexia	Green	Dyman	XX	0	0	1

Matches

Match	White	Blue	Result	Time	Code

Results

Pos	Name

U18 F -48kg

Competitors A

#	Name	Grade	Club	1	2	3	Wins	Pts	Pos
1	GROOTEN Maegan	Green	Hart	XX		10	1	10	2
2	GRENIER Melody	Brown	Boucherville	10	XX	10	2	20	1
3	FIAES Alexia	Green	Dyman			XX	0	0	3

Matches A

Match	White			Blue	Result	Time	Code
D-57	GROOTEN Maegan	1	2	**GRENIER Melody**	0 - 10	0:39	HAN
D-69	**GROOTEN Maegan**	1	3	FIAES Alexia	10 - 0	0:15	IPO
D-79	**GRENIER Melody**	2	3	FIAES Alexia	10 - 0	0:15	IPO

Competitors B

#	Name	Grade	Club	4	5	6	Wins	Pts	Pos
4	PERRON Maika	Blue	Blainville	XX	10		1	10	2
5	WELDON Sasha	Brown	Formokan		XX		0	0	3
6	KO Jenna	Brown	Peak Judo Club	10	10	XX	2	20	1

Matches B

Match	White			Blue	Result	Time	Code
D-58	**PERRON Maika**	4	5	WELDON Sasha	10 - 0	2:19	HAN
D-70	PERRON Maika	4	6	**KO Jenna**	0 - 10	1:09	IPO
D-80	WELDON Sasha	5	6	**KO Jenna**	0 - 10	1:43	IPO

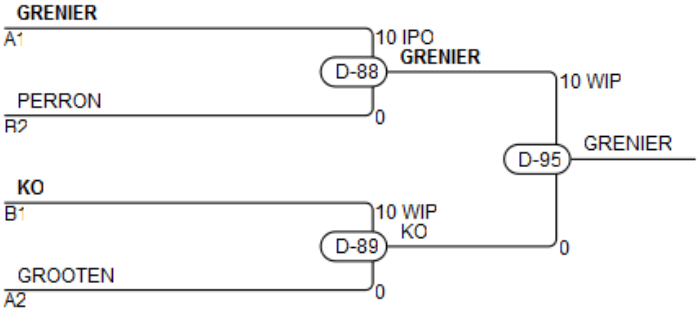

Results

Pos	Name
1	GRENIER Melody, Boucherville
2	KO Jenna, Peak Judo Club
3	PERRON Maika, Blainville
3	GROOTEN Maegan, Hart

U18 F -52kg

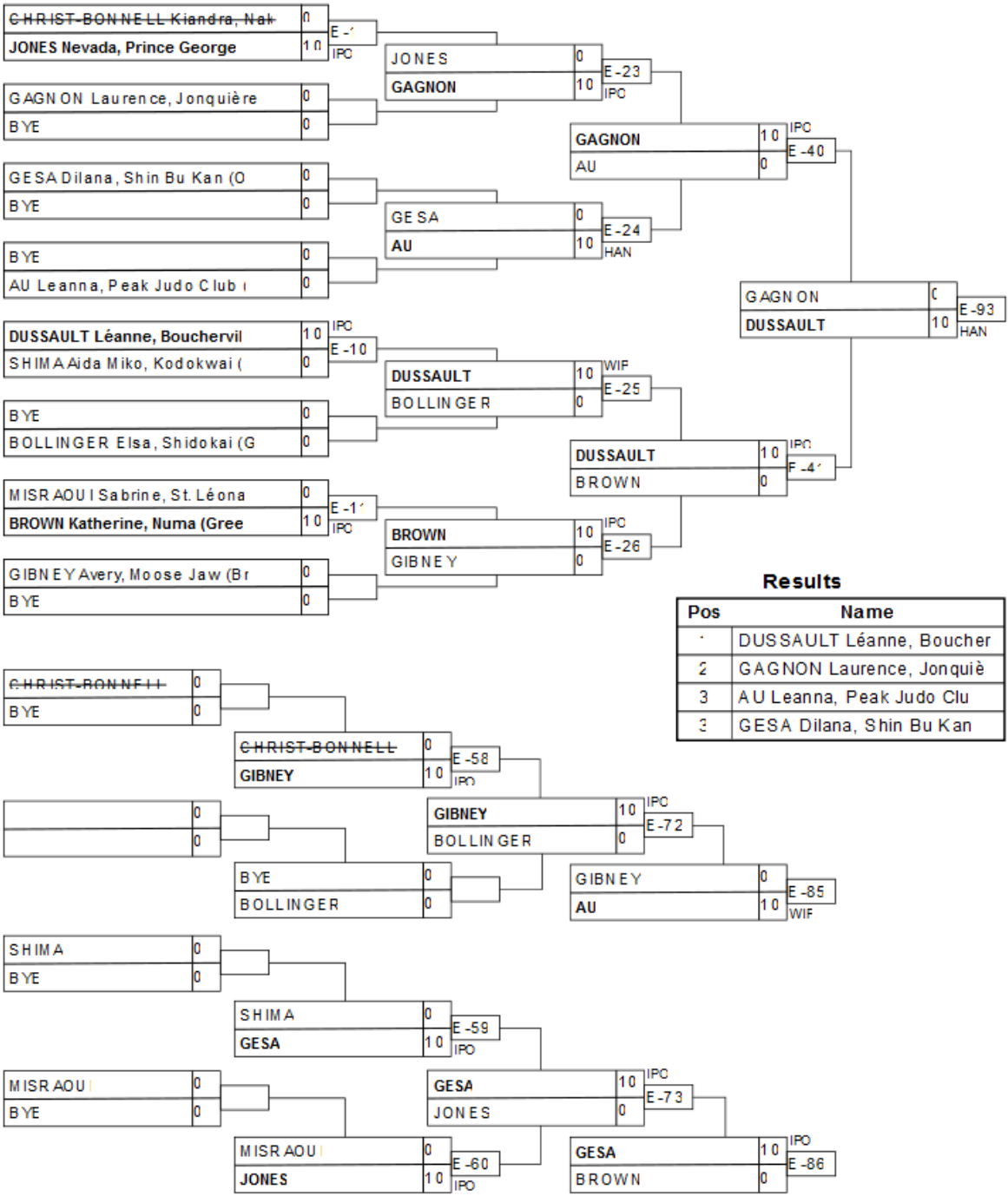

Results

Pos	Name
1	DUSSAULT Léanne, Boucher
2	GAGNON Laurence, Jonquiè
3	AU Leanna, Peak Judo Clu
3	GESA Dilana, Shin Bu Kan

U18 F -57kg

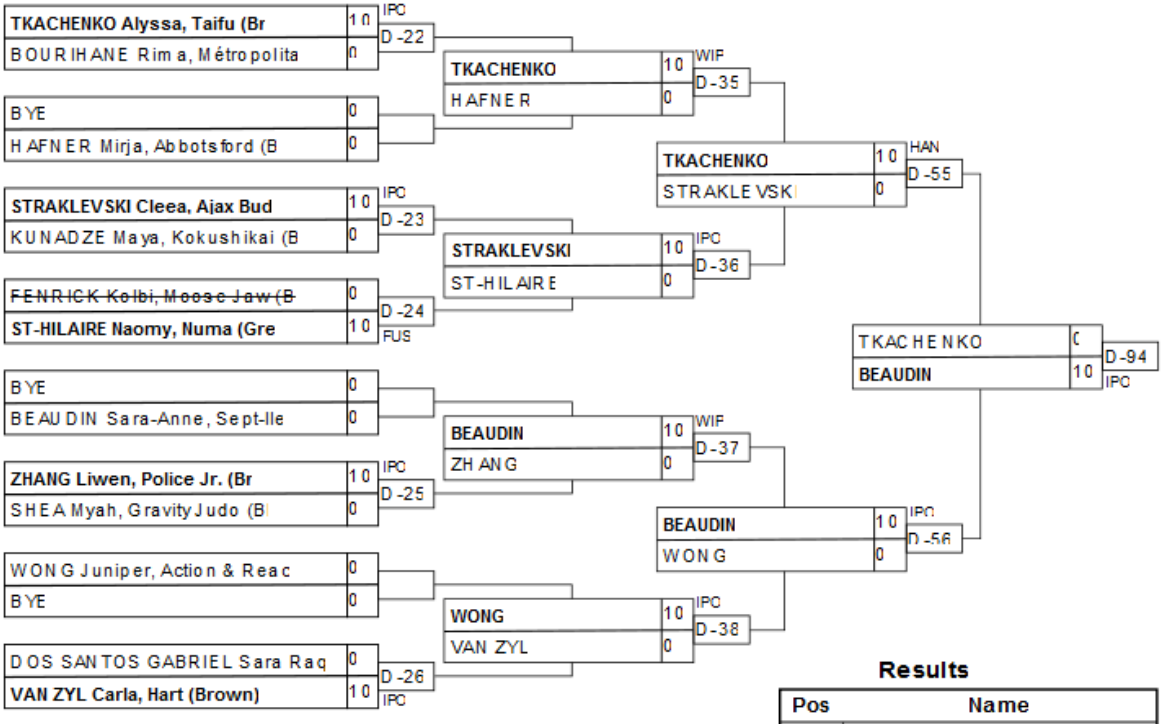

Results

Pos	Name
1	BEAUDIN Sara-Anne, Sept-
2	TKACHENKO Alyssa, Taifu
3	VAN ZYL Carla, Hart (Bro
3	DOS SANTOS GABRIEL Sara

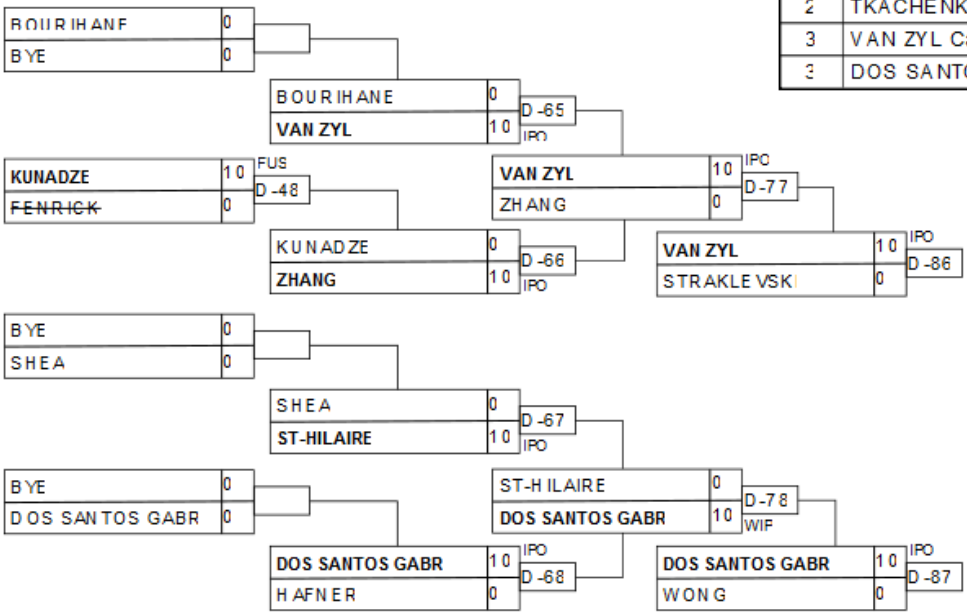

U18 F -63kg

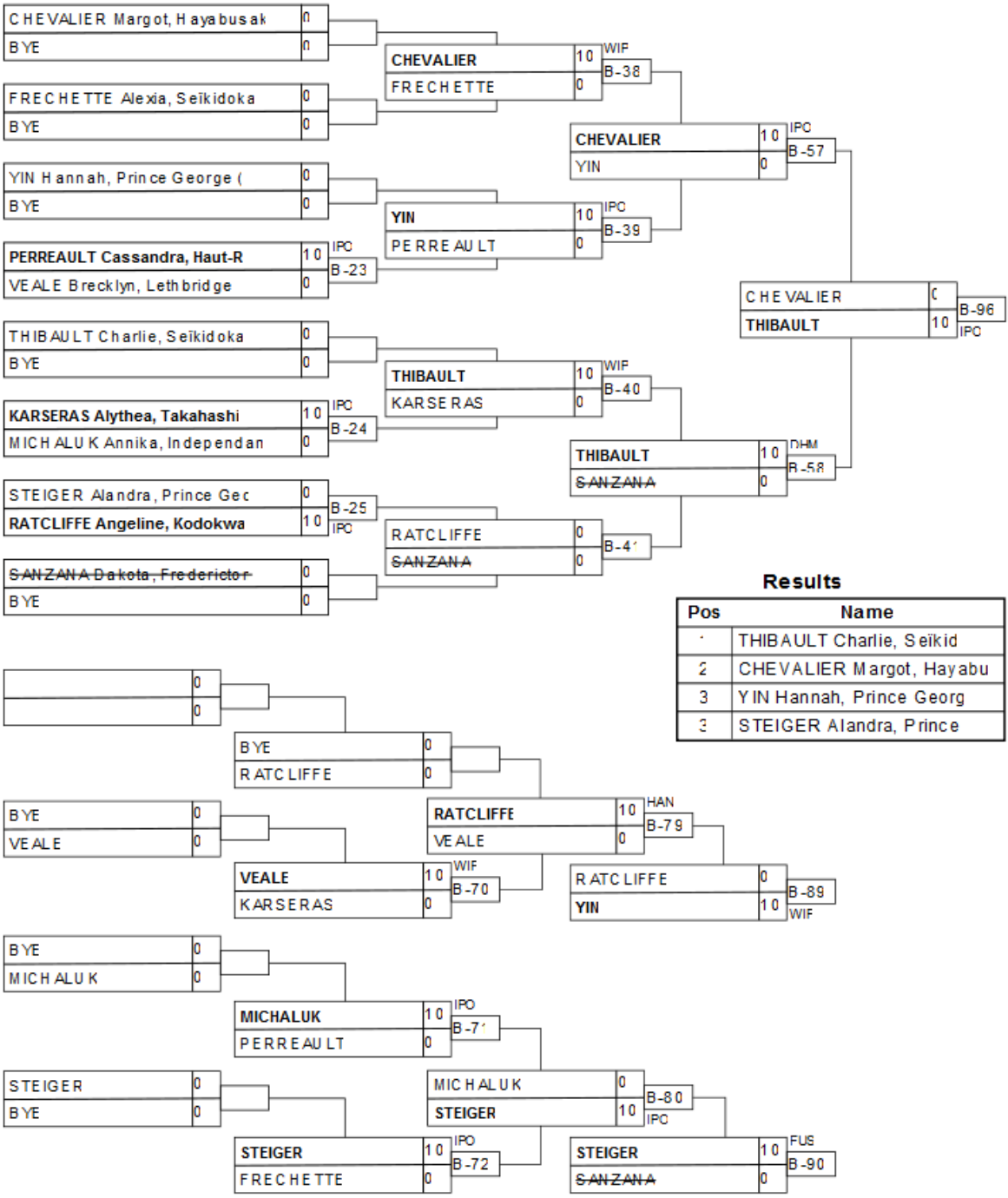

Results

Pos	Name
1	THIBAULT Charlie, Seïkid
2	CHEVALIER Margot, Hayabu
3	YIN Hannah, Prince Georg
3	STEIGER Alandra, Prince

U18 F -70kg

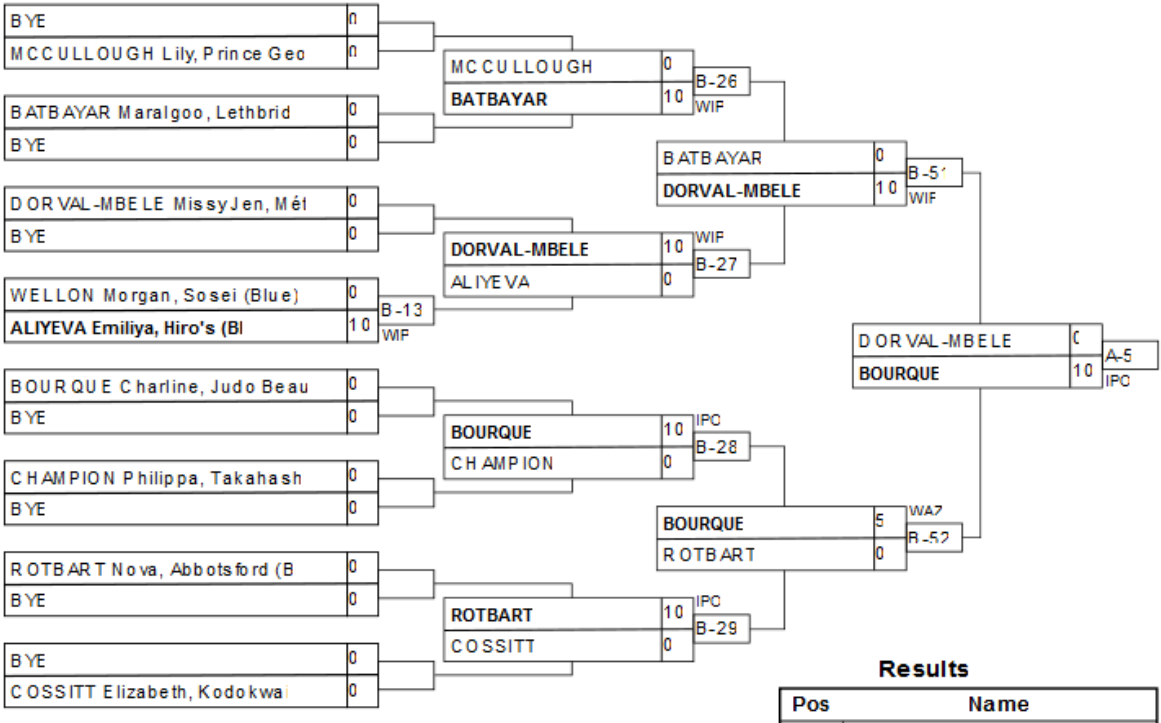

Results

Pos	Name
1	BOURQUE Charline, Judo B
2	DORVAL-MBELE Missy Jen,
3	BATBAYAR Maralgoo, Lethb
3	ROTBART Nova, Abbotsford

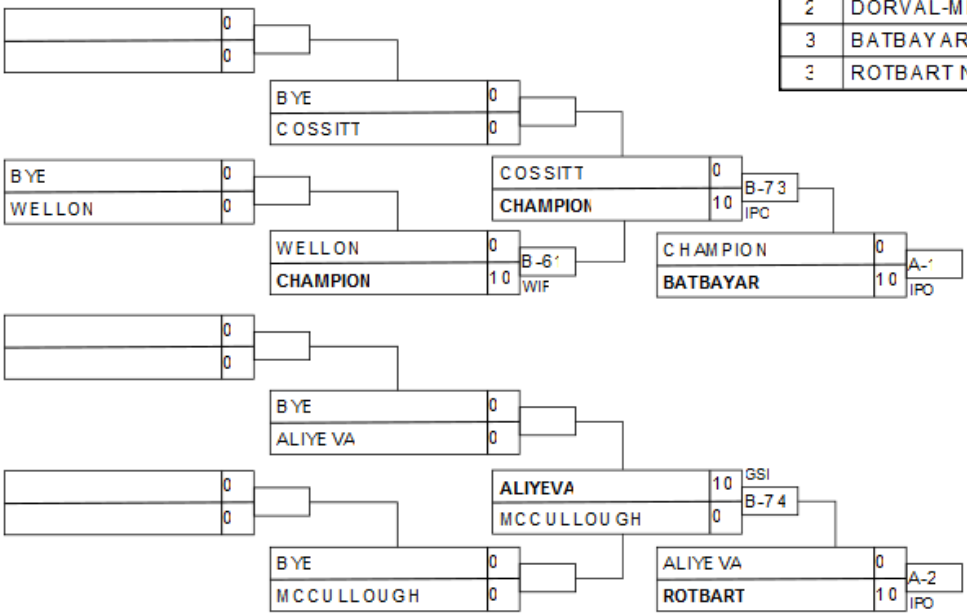

U18 F +70kg

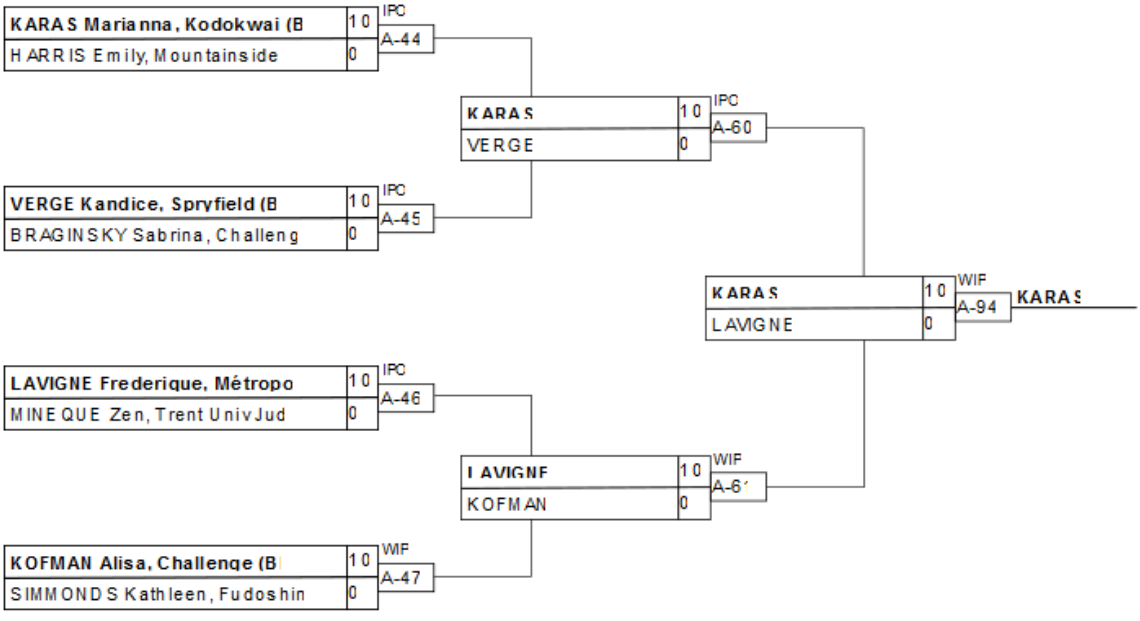

Results

Pos	Name
1	KARAS Marianna, Kodokwai
2	LAVIGNE Frederique, Métr
3	MINEQUE Zen, Trent Univ
3	KOFMAN Alisa, Challenge

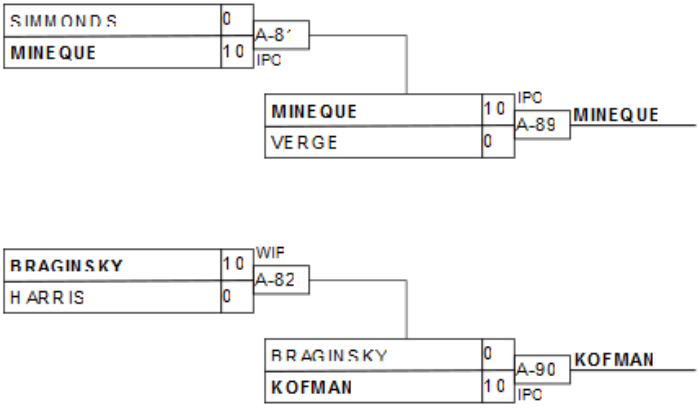

U18 M -50kg

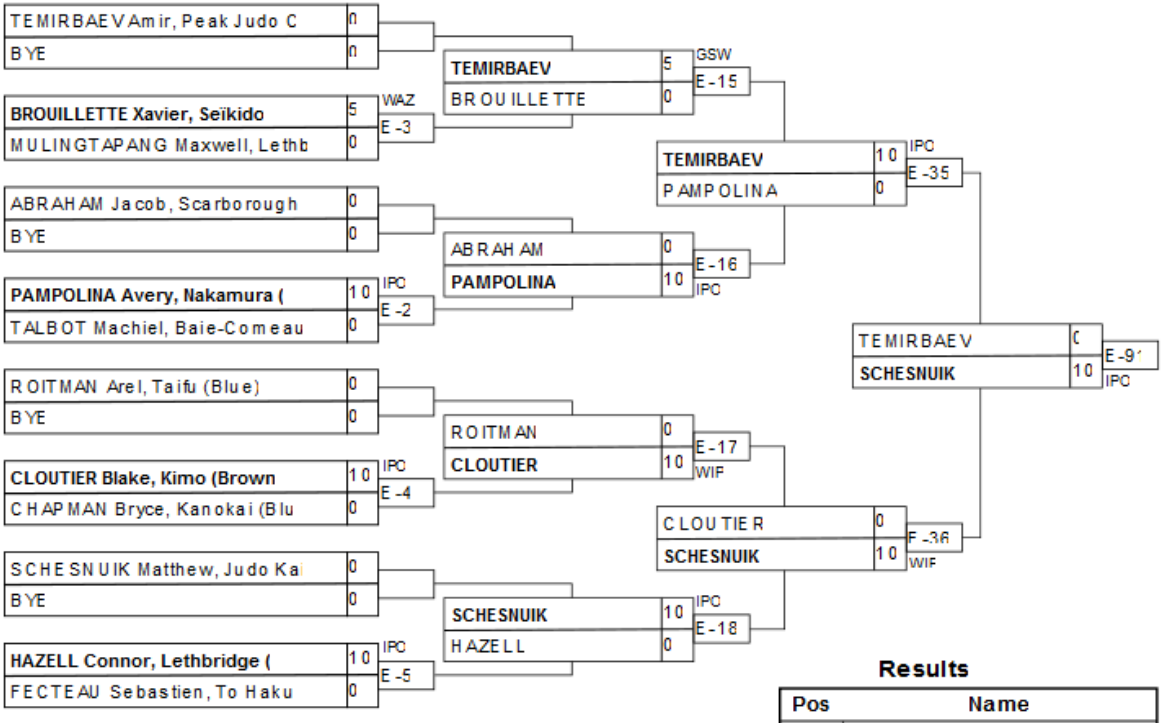

Results

Pos	Name
1	SCHESNUIK Matthew, Judo
2	TEMIRBAEV Amir, Peak Jud
3	PAMPOLINA Avery, Nakamur
3	CLOUTIER Blake, Kimo (Br

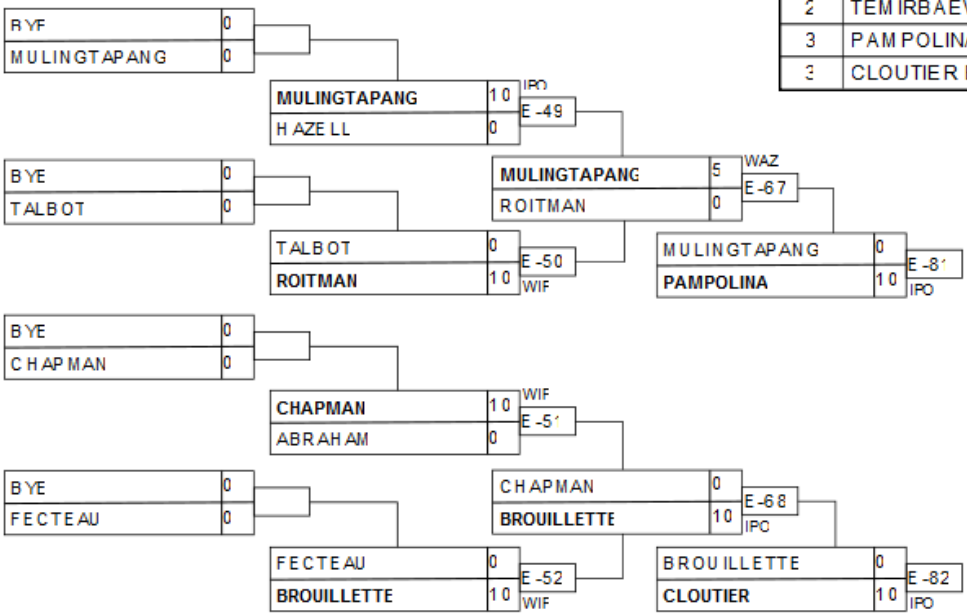

U18 M -55kg

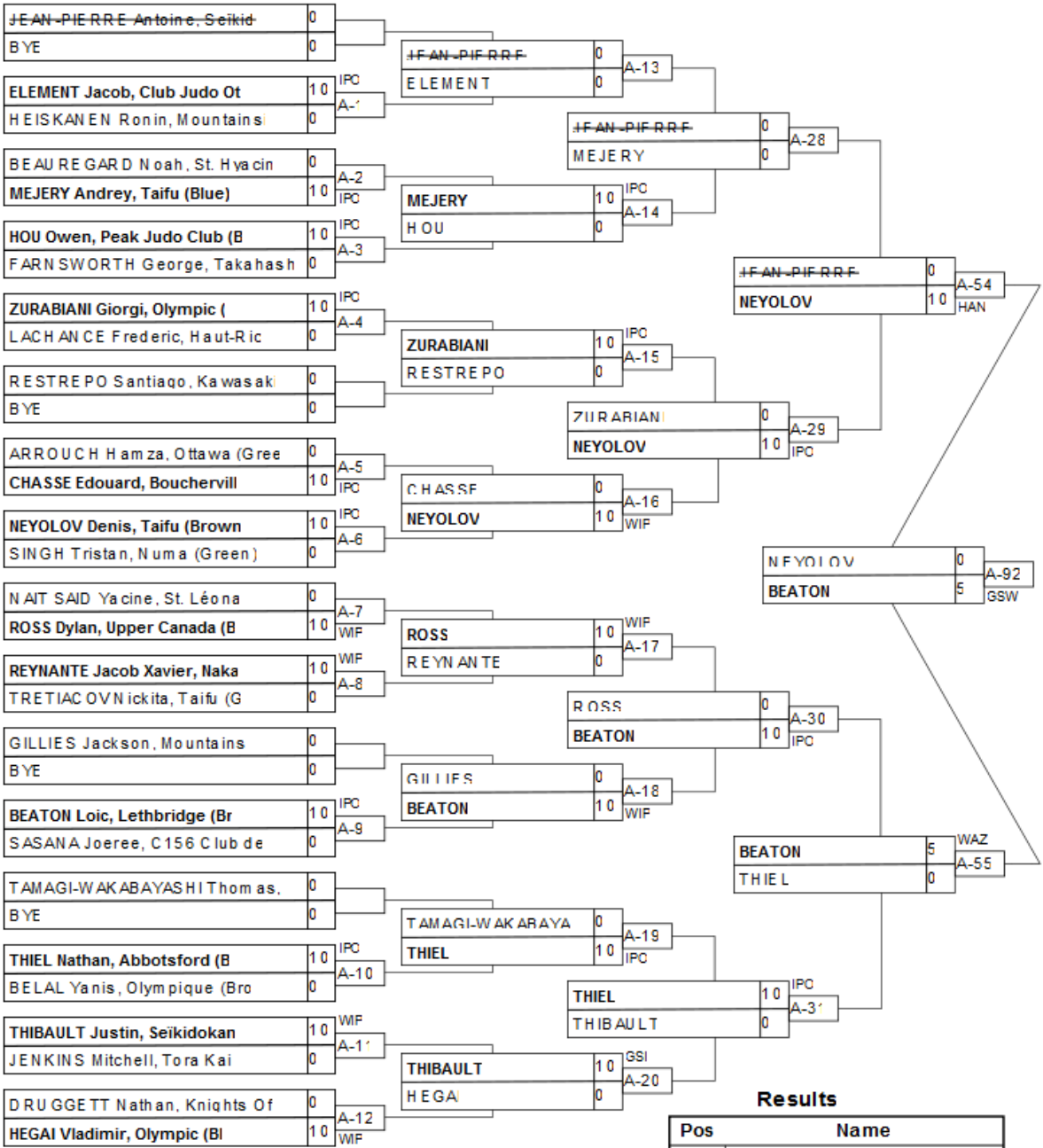

Results

Pos	Name
1	BEATON Loic, Lethbridge
2	NEYOLOV Denis, Taifu (Br
3	THIBAULT Justin, Seïkido
3	THIEL Nathan, Abbotsford

U18 M -60kg

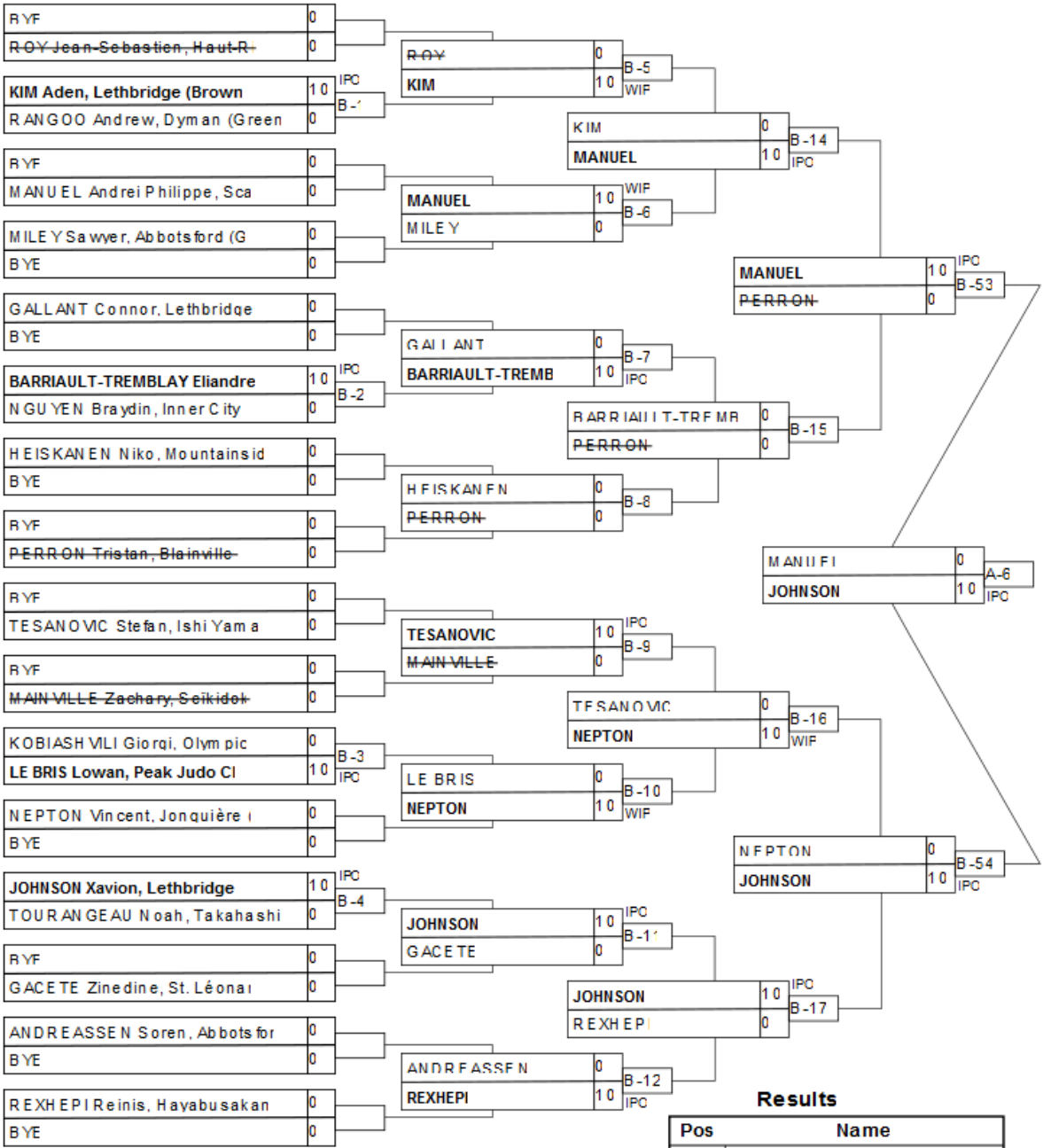

Results

Pos	Name
1	JOHNSON Xavion, Lethbrid
2	MANUEL Andrei Philippe,
3	TESANOVIC Stefan, Ishi Y
3	NEPTON Vincent, Jonquièr

U18 M -66kg

VELONAS Peter, Abbotsford (	0	C -1	
SCORTEANU Edouard, Shidokan	5	WAZ	
FOURNIER Esteban, Seïkidoka	10	IPO C -2	
ZELENKA Rayden, Ajax Budoka	0		
DZHABRAILOV Zubail, Tolide	0		
BYE	0		
KING Adrian, Kawasaki (Blue	0	C -3	
PERUSSE Charles, Sakura (QC	10	HAN	
OELLER Denver, Mountainside	0	C -4	
DUMONT Olivier, Kimo (Brown	10	IPO	
ANTOSH Ryan, Peak Judo Club	0	C -5	
ROBERGE-POITRAS Vincent, Bo	10	IPO	
LABERGE Victor, Beauport (B	10	WIF C -6	
LONTAYAO Aj, Campbell River	0		
TANSKY Shon, Taifu (Brown)	10	IPO C -7	
RILEY Shamus, Kodokwai (Blu	0		
FITHANE Fahd, Shidokan (Sho	10	IPO C -8	
CULLEN Finn, Kokushikai (Br	0		
UDEBASHVILI Alex, Taifu (Bl	10	WIF C -9	
ROBIDAS Xavier, Takahashi (	0		
KAIP Cyrus, Avonhurst (Blue	0	C -10	
MAHZOUNI Vincent, Ajax Budo	10	IPO	
BOUROUISS Hamza, C156 Club	0	C -11	
ALTHOUSE Sawyer, Lethbridge	10	IPO	
DE JESUS Dylan, Action & Re	10	WIF C -12	
ZOUAOUI Gibril, Bouchervil	0		
BEAULAC Adam, Seïkidokan (Q	0	C -13	
MEDNIKOV Michael, Challenge	10	IPO	
DUBE Louis-Maxime, Jonquièr	10	IPO C -14	
MEISTERMAN Kameron, Stevest	0		
ZVYAGIN Ivan, Shin Bu Kan (	10	IPO C -15	
KURPJUWEIT Malakai, Medicin	0		

SCORTEANU	10	WIF C -16	
FOURNIER	0		
DZHABRAILOV	10	IPO C -17	
PERUSSE	0		
DUMONT	10	IPO C -18	
ROBERGE-POITRAS	0		
LABERGE	0	C -19	
TANSKY	10	WIF	
FITHANE	5	WAZ C -20	
UDEBASHVILI	0		
MAHZOUNI	0	C -21	
ALTHOUSE	10	IPO	
DE JESUS	10	IPO C -22	
MEDNIKOV	0		
DUBE	10	IPO C -23	
ZVYAGIN	0		

SCORTEANU	10	IPO C -31	
DZHABRAILOV	0		
DUMONT	0	C -32	
TANSKY	10	IPO	
FITHANE	5	GSW C -33	
ALTHOUSE	0		
DE JESUS	0	C -34	
DUBE	10	IPO	

SCORTEANU	0	C -59	
TANSKY	10	IPO	
TANSKY	0	C -90	
FITHANE	10	GSI	
FITHANE	10	HAN C -60	
DUBE	0		

Results

Pos	Name
1	FITHANE Fahd, Shidokan (
2	TANSKY Shon, Taifu (Brow
3	ANTOSH Ryan, Peak Judo C
3	DUBE Louis-Maxime, Jonqu

U18 M -73kg

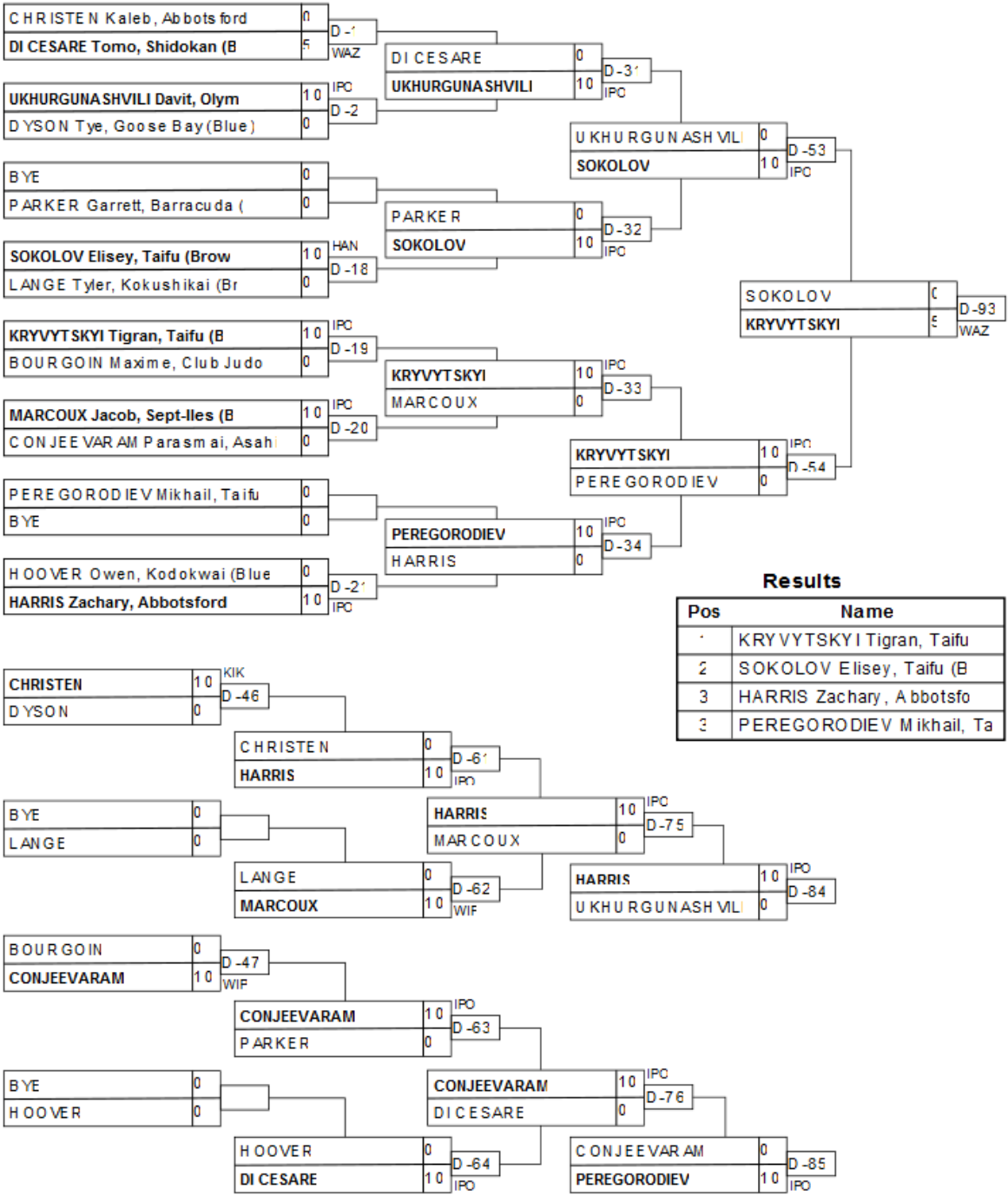

Results

Pos	Name
1	KRYVYTSKYI Tigran, Taifu
2	SOKOLOV Elisey, Taifu (B
3	HARRIS Zachary, Abbotsfo
3	PEREGORODIEV Mikhail, Ta

U18 M -81kg

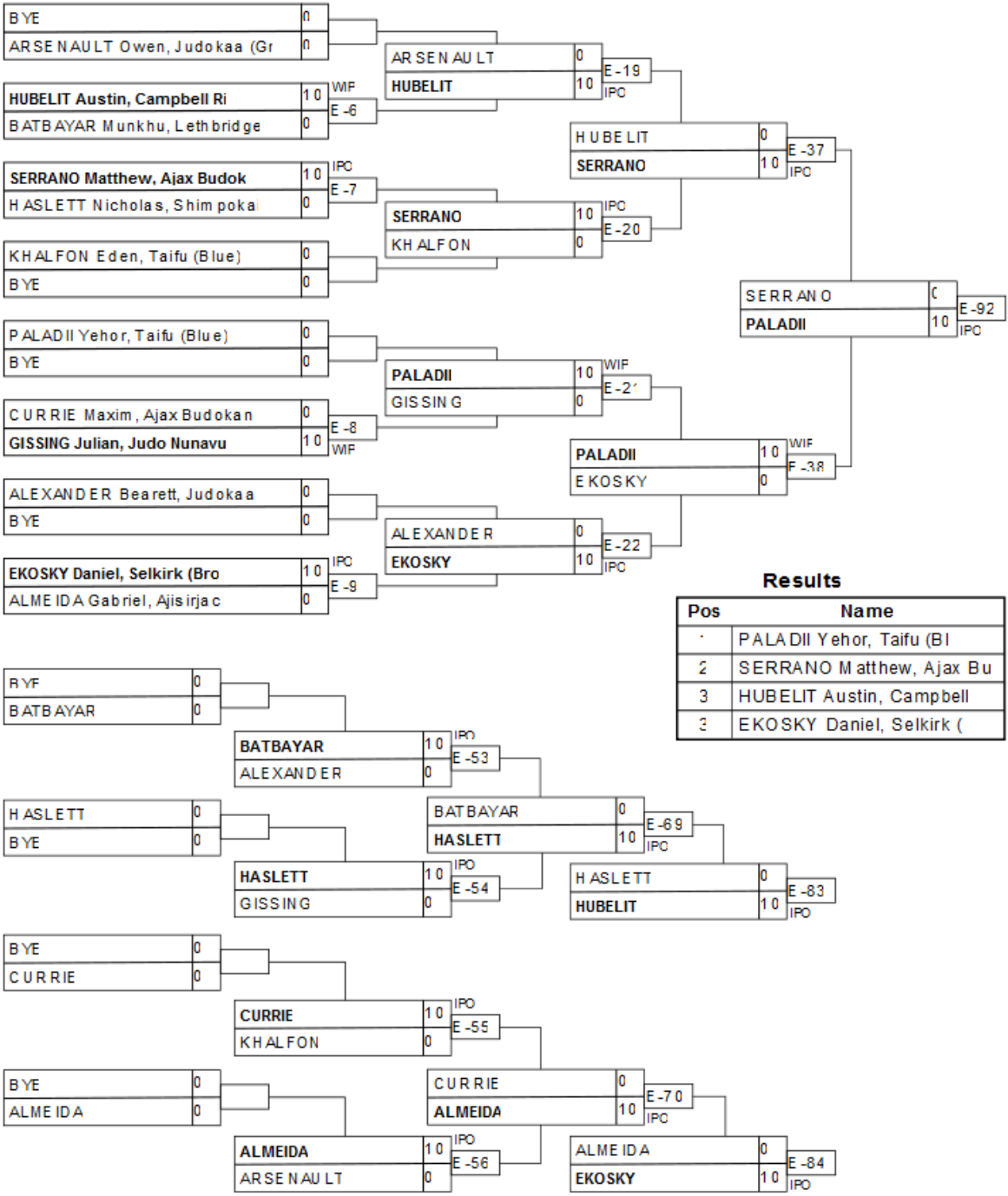

Results

Pos	Name
1	PALADII Yehor, Taifu (Bl
2	SERRANO Matthew, Ajax Bu
3	HUBELIT Austin, Campbell
3	EKOSKY Daniel, Selkirk (

U18 M -90kg

Competitors

#	Name	Grade	Club	1	2	3	Wins	Pts	Pos
1	DVORNITSYN Egor	Green	Taifu	XX			0	0	3
2	KAPLIN Oleksansdr (nick N	Blue	Numa	10	XX	10	2	20	1
3	SILEM Mohamed Amine	Brown	Métropolitain	10		XX	1	10	2

Matches

Match	White			Blue	Result	Time	Code
E-47	DVORNITSYN Egor	1	2	**KAPLIN Oleksansdr (nick Name -**	0 - 10	0:17	WIP
E-65	DVORNITSYN Egor	1	3	**SILEM Mohamed Amine**	0 - 10	0:22	IPO
E-79	**KAPLIN Oleksansdr (nick Name -**	2	3	SILEM Mohamed Amine	10 - 0	0:42	WIP

Results

Pos	Name
1	KAPLIN Oleksansdr (nick Name - Sasha, Numa
2	SILEM Mohamed Amine, Métropolitain

U18 M +90kg

Competitors

#	Name	Grade	Club	1	2	1	2	1	2	Wins	Pts	Pos
1	GOURRAMEN Rachid Rayan	Brown	St. Léonard	XX		XX		XX		0	0	2
2	MERTARCHYAN Patrick	Blue	Challenge	10	XX	10	XX		XX	2	20	1

Matches

Match	White			Blue	Result	Time	Code
E-48	GOURRAMEN Rachid Rayan	1	2	**MERTARCHYAN Patrick**	0 - 10	0:21	IPO
E-66	**MERTARCHYAN Patrick**	2	1	GOURRAMEN Rachid Rayan	10 - 0	2:09	IPO
E-80	GOURRAMEN Rachid Rayan	1	2	MERTARCHYAN Patrick			

Results

Pos	Name
1	MERTARCHYAN Patrick, Challenge

U21 F -48kg

Competitors A

#	Name	Grade	Club	1	2	3	4	Wins	Pts	Pos
1	ORTIZ Monica	Shodan	Métropolitain	XX				0	0	4
2	QUACH Heidi	Shodan	Métropolitain	10	XX	5	10	3	25	1
3	DANILKOV Ekaterina	Shodan	Steveston	10		XX	10	2	20	2
4	MCCRISTALL Angelina	Brown	Upper Canada	10			XX	1	10	3

Matches A

Match	White			Blue	Result	Time	Code
A-56	ORTIZ Monica	1	2	**QUACH Heidi**	0 - 10	1:12	IPO
A-57	**DANILKOV Ekaterina**	3	4	MCCRISTALL Angelina	10 - 0	1:55	IPO
A-69	ORTIZ Monica	1	3	**DANILKOV Ekaterina**	0 - 10	2:07	IPO
A-70	**QUACH Heidi**	2	4	MCCRISTALL Angelina	10 - 0	0:23	WIP
A-77	ORTIZ Monica	1	4	**MCCRISTALL Angelina**	0 - 10	3:17	WIP
A-78	**QUACH Heidi**	2	3	DANILKOV Ekaterina	5 - 0	4:00	WAZ

Competitors B

#	Name	Grade	Club	5	6	7	Wins	Pts	Pos
5	ESPARBES Kylee	Brown	Peak Judo Club	XX			0	0	3
6	TURMEL Marie-Lune	Shodan	Blainville	10	XX		1	10	2
7	MEDILO Charlize Isabelle	Shodan	Lethbridge	10	10	XX	2	20	1

Matches B

Match	White			Blue	Result	Time	Code
A-58	ESPARBES Kylee	5	6	**TURMEL Marie-Lune**	0 - 10	0:48	IPO
A-71	ESPARBES Kylee	5	7	**MEDILO Charlize Isabelle**	0 - 10	2:17	IPO
A-79	TURMEL Marie-Lune	6	7	**MEDILO Charlize Isabelle**	0 - 10	1:12	WIP

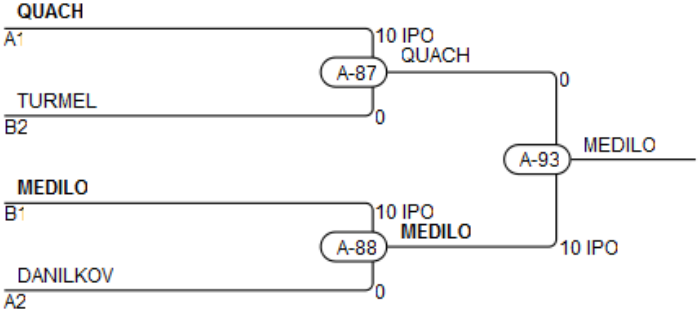

Results

Pos	Name
1	MEDILO Charlize Isabelle, Lethbridge
2	QUACH Heidi, Métropolitain
3	TURMEL Marie-Lune, Blainville
3	DANILKOV Ekaterina, Steveston

U21 F -52kg

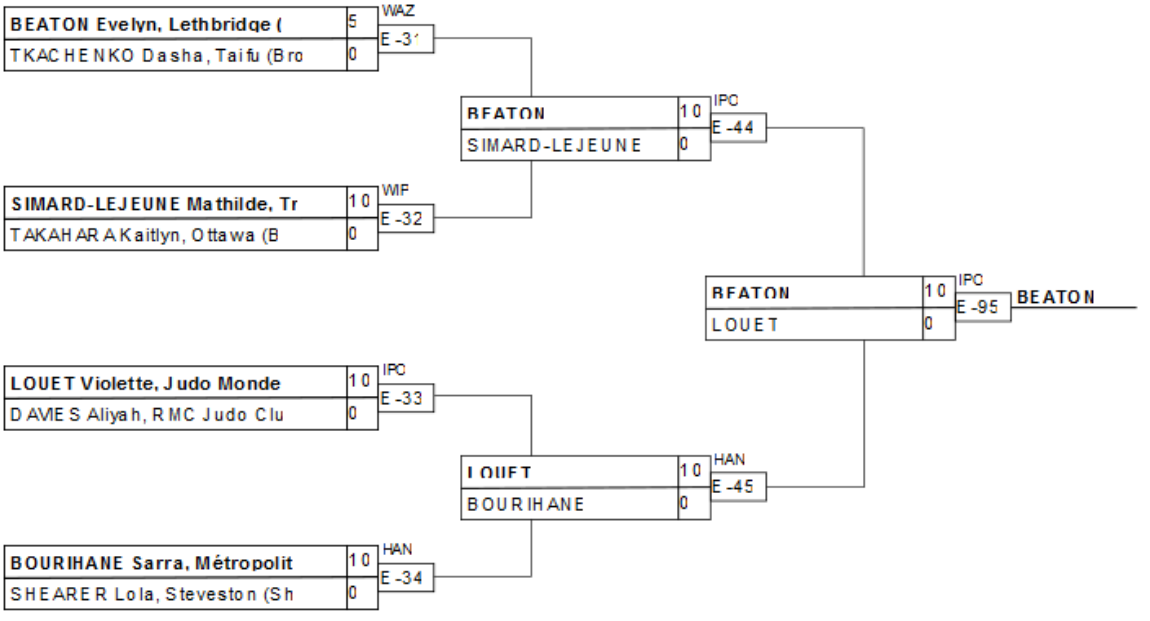

Results

Pos	Name
1	BEATON Evelyn, Lethbridg
2	LOUET Violette, Judo Mon
3	SHEARER Lola, Steveston
3	BOURIHANE Sarra, Métropo

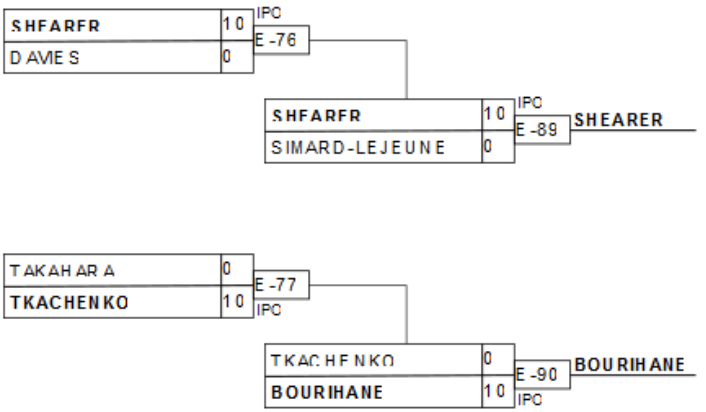

U21 F -57kg

~~MCDORMAND Geneva, Numa (Blu~~	0	E-12 IPO	
LAPOINTE Sophie, Port-Carti	10		
KOLIASKA Aliya, Lethbridge	0		
BYE	0		
BYE	0		
BARDAI Inara, Tritton (Brow	0		
KARAS Kondelia, Kodokwai (S	5	WAZ E-13	
DANILKOV Klavdia, Steveston	0		
BYE	0		
GAULIN Katherine, Juvaldo (	0		
SAVOIE Mahée, Club de Judo	0	E-14 WIF	
MANUEL Alyssandra Phoebe, S	10		
KO Hailey, Peak Judo Club (	0		
BYE	0		
TOSHKOV Catherine, Boucherv	0		
BYE	0		

LAPOINTE	0	E-27 IPO	
KOLIASKA	10		
KOLIASKA	5	GSW E-42	
KARAS	0		
BARDAI	0	E-28 WAZ	
KARAS	5		
KOLIASKA	5	WAZ E-94	
TOSHKOV	0		
GAULIN	0	E-29 WIF	
MANUEL	10		
MANUEL	0	F-43 IPO	
TOSHKOV	10		
KO	0	E-30 WAZ	
TOSHKOV	5		

Results

Pos	Name
1	KOLIASKA Aliya, Lethbrid
2	TOSHKOV Catherine, Bouch
3	KARAS Kondelia, Kodokwai
3	MANUEL Alyssandra Phoebe

~~MCDORMAND~~	0		
BYE	0		
~~MCDORMAND~~	0	E-61 IPO	
KO	10		
BYE	0		
DANILKOV	0		
DANILKOV	10	IPO E-62	
GAULIN	0		
BYE	0		
SAVOIE	0		
SAVOIE	0	E-63 IPO	
BARDAI	10		
	0		
	0		
BYE	0		
LAPOINTE	0		

KO	0	E-74 GSW	
DANILKOV	10		
DANILKOV	0	E-87 WIF	
KARAS	10		
BARDAI	5	WAZ E-75	
LAPOINTE	0		
BARDAI	0	E-88 HAN	
MANUEL	10		

U21 F -63kg

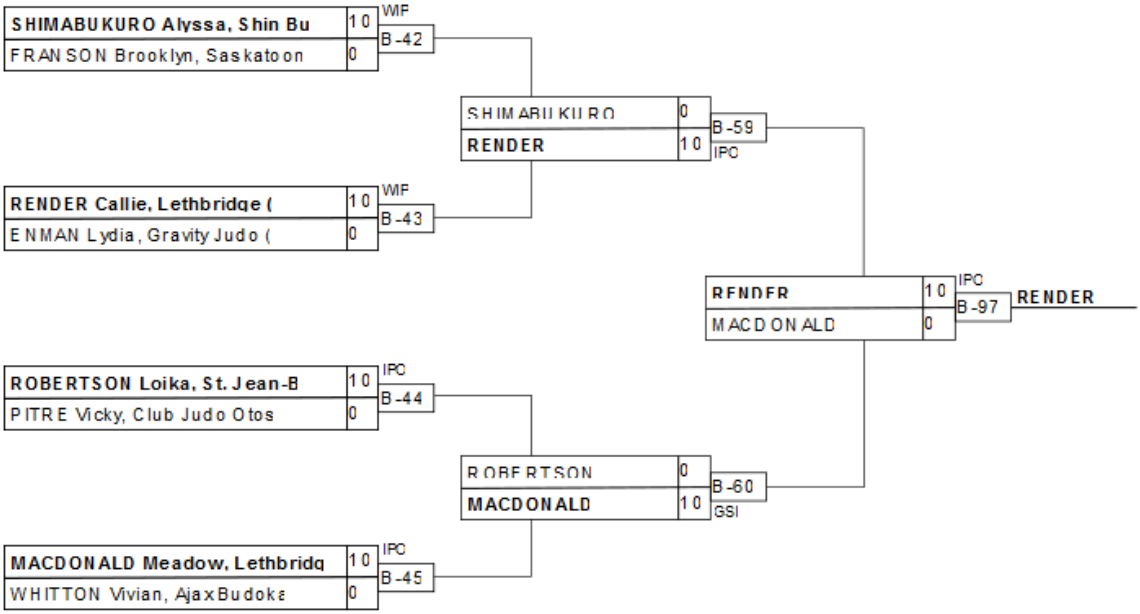

Results

Pos	Name
1	RENDER Callie, Lethbridg
2	MACDONALD Meadow, Lethbr
3	SHIMABUKURO Alyssa, Shin
3	ROBERTSON Loika, St. Jea

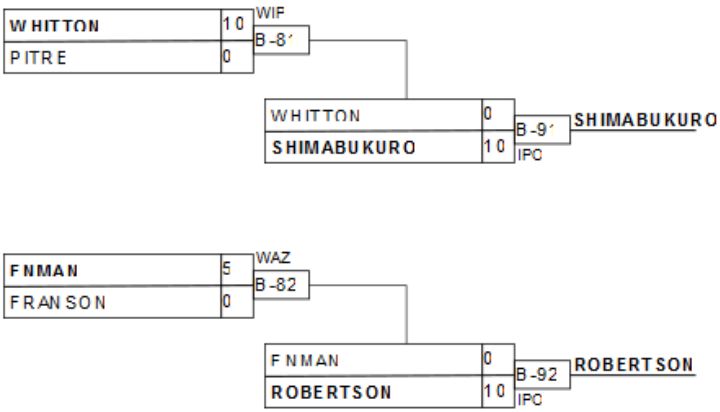

U21 F -70kg

Competitors

#	Name	Grade	Club	1	2	3	Wins	Pts	Pos
1	FRANSON Deziree	Brown	Saskatoon Y	XX			0	0	3
2	BIRON Laurence	Shodan	Varennes	10	XX	10	2	20	1
3	BURT Kiera	Brown	Upper Canada	10		XX	1	10	2

Matches

Match	White			Blue	Result	Time	Code
E-46	FRANSON Deziree	1	2	**BIRON Laurence**	0 - 10	1:51	WIP
E-64	FRANSON Deziree	1	3	**BURT Kiera**	0 - 10	0:50	IPO
E-78	**BIRON Laurence**	2	3	BURT Kiera	10 - 0	1:31	WIP

Results

Pos	Name
1	BIRON Laurence, Varennes
2	BURT Kiera, Upper Canada

U21 M -100kg

Competitors

#	Name	Grade	Club	1	2	1	2	1	2	Wins	Pts	Pos
1	LUCHKIN Nick	Brown	Challenge	XX	10	XX	10	XX		2	20	1
2	HALLETT Josiah	Brown	Regina Y		XX		XX		XX	0	0	2

Matches

Match	White			Blue	Result	Time	Code
A-59	**LUCHKIN Nick**	1	2	HALLETT Josiah	10 - 0	1:21	IPO
A-72	HALLETT Josiah	2	1	**LUCHKIN Nick**	0 - 10	0:00	IPO
A-80	LUCHKIN Nick	1	2	HALLETT Josiah			

Results

Pos	Name
1	LUCHKIN Nick, Challenge

U21 M -60kg

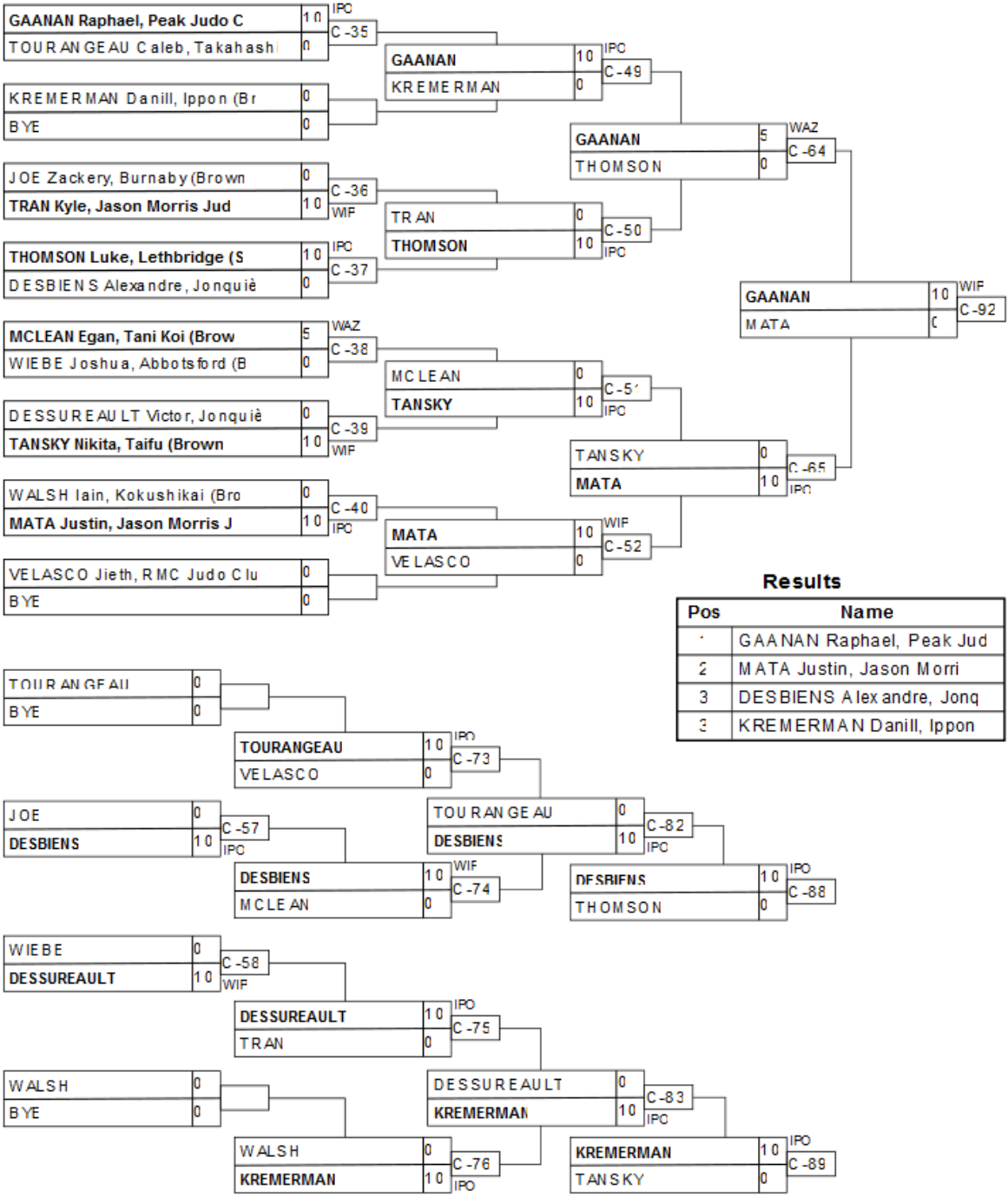

Results

Pos	Name
1	GAANAN Raphael, Peak Jud
2	MATA Justin, Jason Morri
3	DESBIENS Alexandre, Jonq
3	KREMERMAN Danill, Ippon

U21 M -66kg

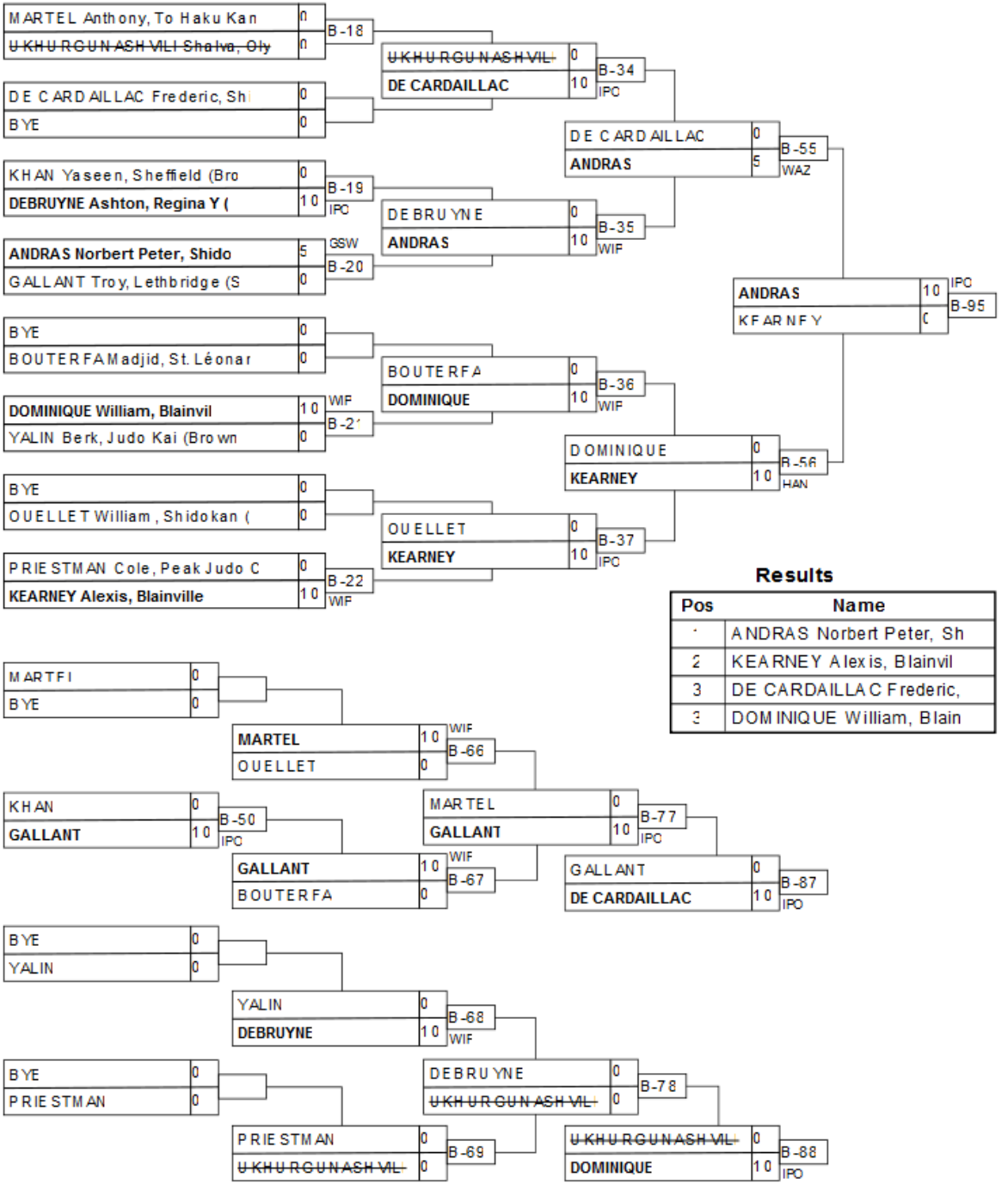

Results

Pos	Name
1	ANDRAS Norbert Peter, Sh
2	KEARNEY Alexis, Blainvil
3	DE CARDAILLAC Frederic,
3	DOMINIQUE William, Blain

U21 M -73kg

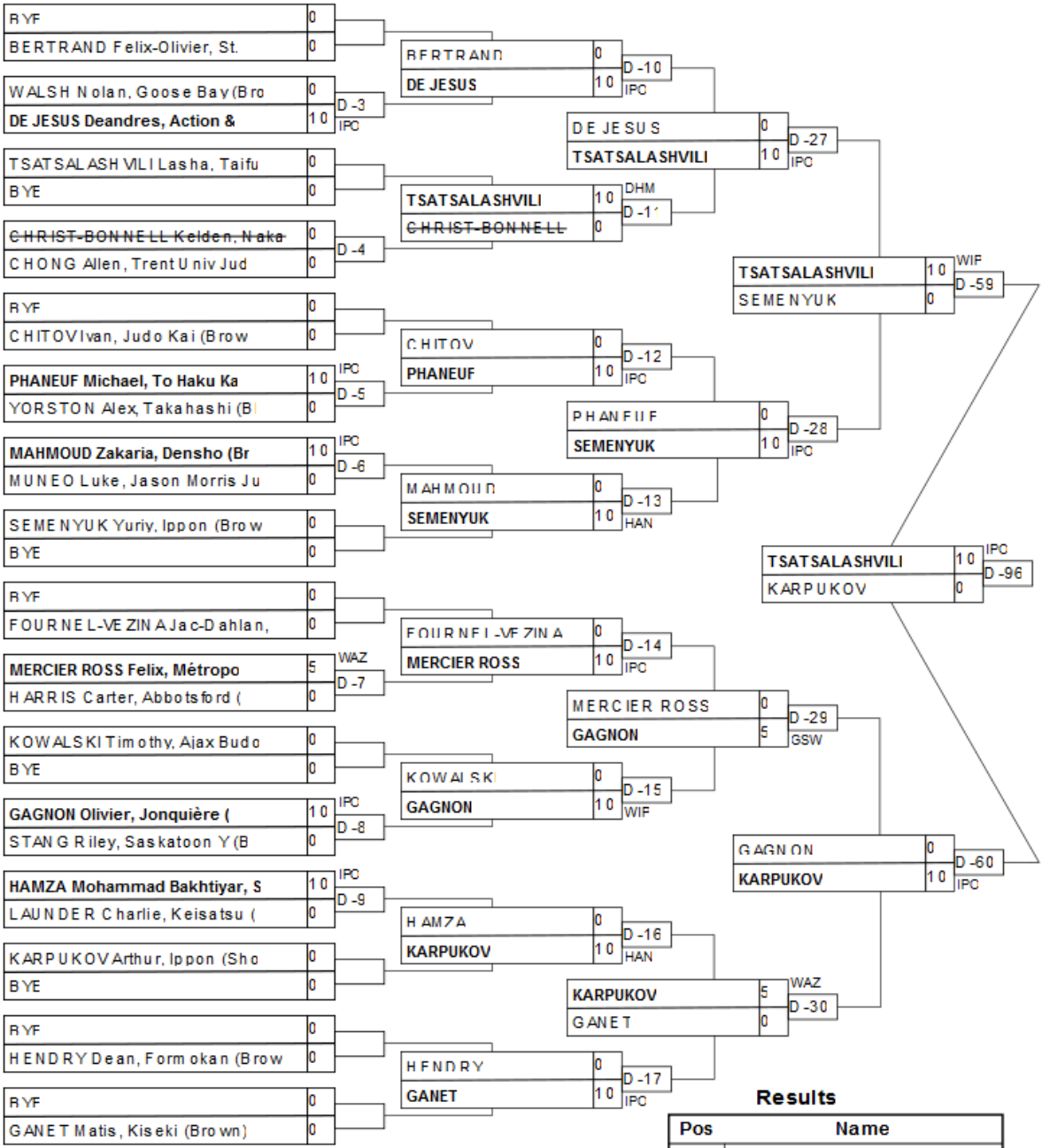

Results

Pos	Name
1	TSATSALASHVILI Lasha, Ta
2	KARPUKOV Arthur, Ippon (
3	SEMENYUK Yuriy, Ippon (B
3	GAGNON Olivier, Jonquièr

U21 M -81kg

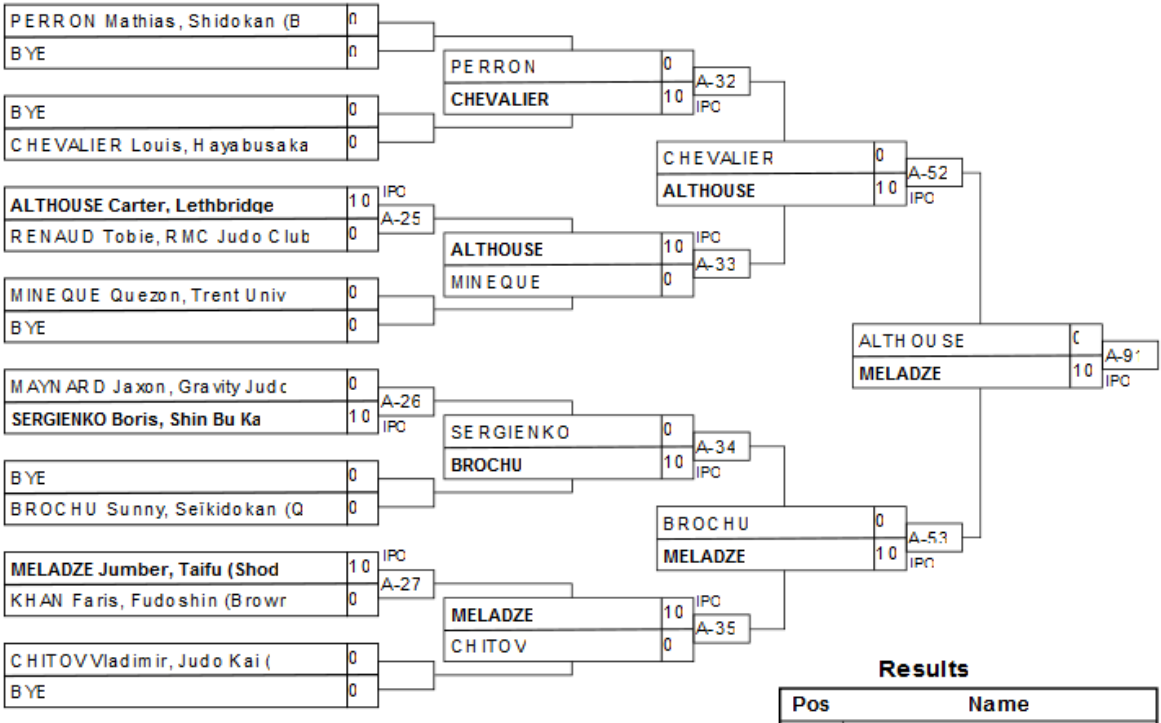

Results

Pos	Name
1	MELADZE Jumber, Taifu (S
2	ALTHOUSE Carter, Lethbri
3	CHEVALIER Louis, Hayabus
3	BROCHU Sunny, Seïkidokan

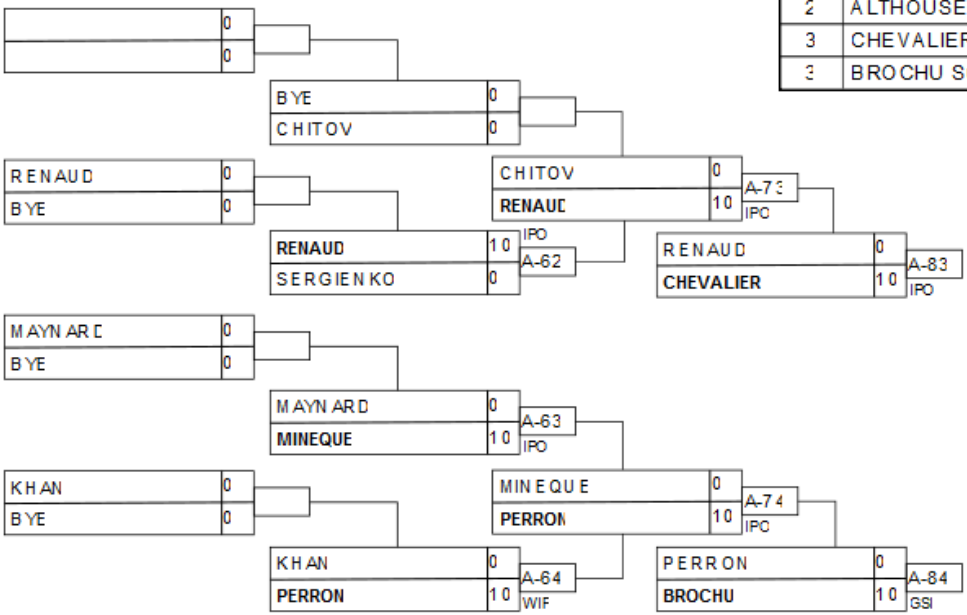

U21 M -90kg

Competitors A

#	Name	Grade	Club	1	2	3	4	Wins	Pts	Pos
1	CARTIER Maxime	Brown	Olympique	XX		10		1	10	3
2	SOLOVEICHIK Yonatan	Brown	Challenge	10	XX	10	10	3	30	1
3	KHAN Faris Ali	Brown	Fudoshin			XX		0	0	4
4	BARCLAY Aiden	Shodan	Asahi	10		10	XX	2	20	2

Matches A

Match	White			Blue	Result	Time	Code
C-61	CARTIER Maxime	1	2	**SOLOVEICHIK Yonatan**	0 - 10	1:26	WIP
C-62	KHAN Faris Ali	3	4	**BARCLAY Aiden**	0 - 10	0:23	WIP
C-70	**CARTIER Maxime**	1	3	KHAN Faris Ali	10 - 0	0:18	IPO
C-71	**SOLOVEICHIK Yonatan**	2	4	BARCLAY Aiden	10 - 0	0:47	IPO
C-79	CARTIER Maxime	1	4	**BARCLAY Aiden**	0 - 10	0:57	IPO
C-80	**SOLOVEICHIK Yonatan**	2	3	KHAN Faris Ali	10 - 0	0:20	IPO

Competitors B

#	Name	Grade	Club	5	6	7	Wins	Pts	Pos
5	ELLIS Ethan	Brown	Formokan	XX			0	0	3
6	GARAND Alec	Shodan	Zenshin	10	XX	10	2	20	1
7	TAN William	Blue	Dyman	10		XX	1	10	2

Matches B

Match	White			Blue	Result	Time	Code
C-63	ELLIS Ethan	5	6	**GARAND Alec**	0 - 10	0:48	WIP
C-72	ELLIS Ethan	5	7	**TAN William**	0 - 10	0:06	IPO
C-81	**GARAND Alec**	6	7	TAN William	10 - 0	0:27	IPO

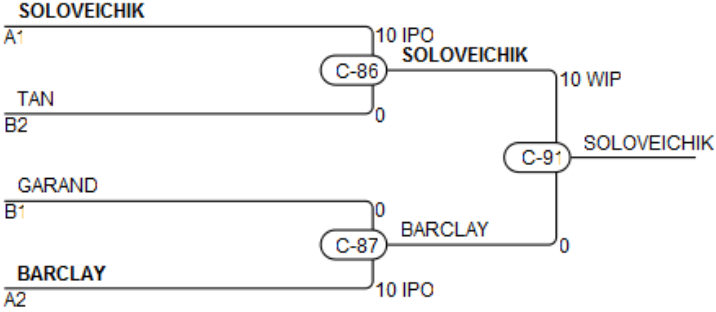

Results

Pos	Name
1	SOLOVEICHIK Yonatan, Challenge
2	BARCLAY Aiden, Asahi
3	TAN William, Dyman
3	GARAND Alec, Zenshin

U21 M +100kg

Competitors

#	Name	Grade	Club	1	2	3	Wins	Pts	Pos
1	BELAL Rayan	Brown	Olympique	XX	10		1	10	2
2	GAUDET Ethan	Blue	Toshidokan		XX		0	0	3
3	ALLEN Lucas	Brown	Huntsville	10	10	XX	2	20	1

Matches

Match	White			Blue	Result	Time	Code
E-39	**BELAL Rayan**	1	2	GAUDET Ethan	10 - 0	0:19	IPO
E-57	BELAL Rayan	1	3	**ALLEN Lucas**	0 - 10	1:42	IPO
E-71	GAUDET Ethan	2	3	**ALLEN Lucas**	0 - 10	0:00	IPO

Results

Pos	Name
1	ALLEN Lucas, Huntsville
2	BELAL Rayan, Olympique